PowerWAVE 1000 (1–3 kVA)

User Manual

KOHLER POWER
uninterruptible

Document Control

ISSUE	DATE	REVISION SUMMARY
TS_600_00	06/04/2017	First Issue
TS_600_01	26/02/19	Kohler rebranding
TS_600_02	08/05/19	Updated weights and dimensions

Useful Contacts

www.kohler-ups.co.uk	Kohler Uninterruptible Power Ltd. web site
ukservice.ups@kohler.com	Service department – booking service, fault reporting etc.
uktechnicalsupport.ups@kohler.com	Technical queries
uksales.ups@kohler.com	Hardware sales
ukservicesales.ups@kohler.com	Extended warranty agreements etc

All product, product specifications and data are subject to change without notice to improve reliability, function, design or otherwise. Kohler Uninterruptible Power Ltd. has taken every precaution to produce an accurate, complete and easy to understand specification document and will assume no responsibility nor liability for direct, indirect or accidental personal or material damage due to any misinterpretation of, or accidental errors, in this manual.

© 2019 Kohler Uninterruptible Power Ltd.

This manual may not be copied or reproduced without written permission of Kohler Uninterruptible Power Ltd.

Table of contents

1: Safety **1**

1.1 Description of symbols used in this manual 1
1.2 User precautions 1
1.3 Important safety notes 2
1.4 Storage instructions 2

2: General Description **3**

2.1 Introduction 3
2.1.1 Advanced design features 3
2.1.2 PowerWAVE 1000 (1-3kVA) Model range 4
2.2 UPS Operating principles 4
2.2.1 Basic block diagram 4
2.2.2 System operating modes 5
2.3 Operator control panel 7
2.3.1 LED Indicators 7
2.3.2 Operator keypad 8
2.3.3 LCD Display 8
2.4 UPS Rear view 10
2.4.1 Communication Ports 10
2.5 External battery cabinet 12
2.6 Warranty 13
2.7 Extended Warranty 13
2.8 Additional Service/Maintenance Support 13

3: Installation **14**

3.1 Unpacking the UPS equipment 14
3.2 Selecting a suitable installation location 14
3.2.1 Clearances 15
3.3 Assembling the UPS mounting hardware 17
3.3.1 Hardware accessories pack 17
3.3.2 Stand-alone Tower assembly 17
3.3.3 Rack installation 17
3.4 Assembling the external battery cabinet mounting hardware 20
3.4.1 Stand-alone tower installation 20
3.4.2 Combined tower installation 21
3.4.3 Rack installation 22
3.5 Electrical installation 22
3.6 Initial UPS power-up and commissioning 22

4: Operation **23**

4.1 Introduction 23
4.2 UPS start-up procedures 24
4.2.1 How to start the UPS (from utility mains) 24
4.2.2 How to start the UPS (from battery) 25

4.2.3 How the monitor the UPS input/output operating conditions 26
4.3 UPS shut down procedures 27
4.3.1 How to turn off the UPS (from ON INVERTER or ECO Mode) 27
4.3.2 How to turn off the UPS (from ON BATTERY Mode) 27
4.4 Manual load transfer between inverter and bypass 27
4.5 Functions menu 28
4.5.1 How to disable the alarm buzzer operation 28
4.5.2 How to perform a battery test 28
4.5.3 Functions menu 29
4.5.4 Operating parameters setting menu 30

5: Maintenance 31

5.1 Introduction 31
5.2 Scheduled maintenance 31
5.2.1 Preventative maintenance inspection 31
5.2.2 Battery maintenance and testing 31

6: Troubleshooting 33

6.1 Introduction 33
6.2 Fault identification 33
6.2.1 Error codes 33
6.2.2 Audible warning alarm 33
6.2.3 Warning symbols 34
6.3 Troubleshooting a fault condition 34
6.4 Troubleshooting an operational problem 35
6.5 UPS Fault handling 35
6.5.1 Output load short circuit when the output supply is via inverter 36
6.5.2 Output short-circuit when the output supply via the bypass line 36
6.5.3 Inverter/internal over-temperature 36
6.5.4 Inverter over-current and output voltage out of tolerance 36
6.6 UPS System reset 36

7: Options 37

7.1 Communications options 37
7.2 RS-232 Computer serial interface 37
7.3 Emergency Power Off (EPO) / Remote ON/OFF (ROO) 38
7.4 CS141 /SMNP adapters 38
7.5 AS400 (dry contact) card 39

8: Specification 40

1 Safety

1.1 Description of symbols used in this manual

WARNING: The warning symbol is used where there is danger of an electrical shock, equipment damage or personal injury.

CAUTION: *The caution symbol is used to highlight important information to avoid possible equipment malfunction or damage.*

1.2 User precautions

WARNING: Do not attempt to install this UPS system until you are satisfied that you have read and understood ALL the safety instructions and hazard warnings contained in this manual.

WARNING: Keep this manual with the UPS for future reference.

WARNING: DO NOT OPEN THE CASE. If you open the case of the UPS you will be exposed to dangerous voltages. The UPS does not contain any user-serviceable parts, so do not attempt to repair this unit yourself as doing so will void your warranty. If the UPS malfunctions it must be serviced or repaired by a trained engineer. Always contact your local service agent if repair is necessary.

WARNING: Do not disconnect the power cord from the UPS AC Input socket while the UPS is turned on. The UPS is equipped with an EMI filter, and to prevent a potential leakage current hazard the AC mains supply must be securely grounded at all times. You should double check that the UPS supply earth connection is properly grounded before you connect AC mains to the UPS.

WARNING: Kohler Uninterruptible Power will assume no responsibility or liability for accidents or injuries due to incorrect operation or manipulation of the UPS or peripheral equipment.

CAUTION: *The PowerWAVE 1000 (1-3kVA) is a Class A UPS product (according to EN 62040-3).*
In a domestic environment the UPS may cause radio interference and the user may be required to undertake additional measures.

1.3 Important safety notes

CAUTION: *Please read the following notes carefully prior to installation and use.*

1. The UPS warranty will become null and void if liquids are spilt on the UPS case, or foreign objects are dropped into the unit. Such mishaps could severely damage the UPS and present a shock hazard to anyone who touches the unit.
2. The ventilation grills on the UPS front panel must be kept free of obstruction at all times.
3. The UPS is must be installed in a sheltered and controlled environment away from direct sunlight. The operating temperature should be between 0~40°C (ideally 20°C) with relative humidity of 0~90%, non-condensing. Further details concerning the installation environment are included in the installation chapter of this manual.
4. Before installing the equipment you must check to ensure that the input voltage stated on the UPS data-plate on the back of the unit matches your local utility supply voltage.
5. The UPS warranty will be rendered void, and the manufacturer reserves the right to refuse replacement or compensation, if the UPS malfunctions due to:
   - Accidental damage to the UPS.
   - Damage or malfunction due to installing the UPS in an environment that does not meet the conditions specified in this manual.
   - Damage or malfunction due to improper installation, configuration or maintenance carried out by an unauthorised person.

1.4 Storage instructions

If you intend to store the UPS for an extended period, in a moderate climate, the batteries should be charged for 12 hours every 3 months by connecting the UPS to the utility supply. If the ambient temperature at the storage location is above 25°C, this should be carried out every 2 months.

CAUTION: *Always switch off the UPS before moving it.*

2 General Description

2.1 Introduction

Congratulations on your purchase of the PowerWAVE 1000 (1-3kVA) UPS.

High reliability, low operating cost and excellent electrical performance are just some of the highlights of this innovative UPS solution.

Kohler Uninterruptible Power Ltd. specialises in the installation and maintenance of uninterruptible power systems; and this UPS is just one example of our wide range of state-of-the-art power protection devices that will provide your critical equipment with a steady and reliable power supply for many years.

2.1.1 Advanced design features

By using the latest technological developments in power engineering, the PowerWAVE 1000 (1-3kVA) represents a new generation of transformerless UPS-System. Its advanced double conversion Voltage and Frequency Independent (VFI) topology responds fully to both the highest availability and environmentally friendly requirements, compliant with IEC 62040-3 (VFI-SS-111) standards. A full UPS specification is provided in Chapter 8 of this manual.

Following, are some of this unit's advanced design features:

- True online technology continuously supplies your critical applications with stable, regulated, transient-free pure sine-wave AC power.
- High-Frequency Transformerless technology and tower-convertible enclosure enables the UPS to be integrated into even the most difficult environments with space constraints.
- User-friendly design that permits simple and trouble-free installation. All units are supplied with input and output power cables as standard.
- Smart battery management system which extends the battery life span.
- Highly efficient PWM sine-wave technology yields excellent UPS efficiency. The high crest factor of the inverter handles peak inrush current loads and so avoids a need to upgrade to a UPS with a higher power rating.
- Compliant with various stringent international EMC standards for electromagnetic interference & protection.
- Selection of output voltages (200/208/220/230/240) available to match the UPS to local supply specifications or specific load voltage requirements.
- A selectable bypass voltage tolerance (low/high sensitivity) restricts the range of voltages that can be applied to the load when the UPS operates on bypass. The ranges are ±15% (low sensitivity) and ±10%V (high sensitivity). For example, if the output voltage setting is 230V the bypass sensitivity Low range is 230V ±15%.
- Selectable 50Hz or 60 Hz operation.
- Fully digitized control logic for better functionality and enhanced power protection. Digital signal processing (DSP) also provides efficient communication capabilities for enhanced remote control and monitoring flexibility.
- Active power factor correction (PFC) control function constantly maintains the UPS input power factor to >0.99 at 100% load, with resulting outstanding energy efficiency.
- Wide input voltage tolerance, from 110V~300V, allows the UPS to operate normally without draining the battery unnecessarily during significant mains voltage dips, which helps extend the battery service life.
- DC-start function permits the UPS to be started during a utility power failure if required.
- Overload protection system automatically switches the UPS to bypass mode if an overload occurs and automatically switch back to inverter mode once the overload condition ceases. Should the output become short-circuited, the UPS puts the system in stand-by mode, provides visible and audible alarms, and turns off the output supply automatically until the short circuit situation is resolved manually.

2.1.2 PowerWAVE 1000 (1-3kVA) Model range

The PowerWAVE 1000 (1-3kVA) UPS range comprises 1 kVA, 2 kVA and 3 kVA models, each of which is designed as a self-contained UPS comprising a rectifier, battery charger, inverter, static switch and battery pack. All the models in this range are easy to install, and supplied with suitably terminated power cables.

The PowerWAVE 1000 (1-3kVA) operates as a stand-alone UPS module and can be mechanically configured as a floor-standing tower unit or installed in a standard 19 inch rack. An accessory pack which contains all the parts necessary to configure the unit for either type of installation is supplied with the UPS.

Optional external battery cabinets are available to increase the UPS autonomy time. The battery cabinet design compliments the UPS cabinet and the two cabinets can be mechanically connected together to form a single unit when installed as a tower system – see Chapter 3 (Installation) for mechanical configuration details.

		1 kVA	2 kVA	3 kVA
Maximum output power (0.9 pf)	kVA (kW)	1.0 (0.9)	2.0 (1.68)	3.0 (2.7)
Dimensions (WxHxD)	mm in	440 x 88(2U) x 405 17.3 x 3.5(2U) x 15.9	440 x 88(2U) x 600 17.3 x 3.5(2U) x 23.6	440 x 88(2U) x 600 17.3 x 3.5(2U) x 23.6
Weight (with internal batteries)	kg/lb	11.7 kg / 25.8 lb	21.8 kg / 48.1 lb	24.6 kg / 54.2 lb
Sound level	dBA	≤50	≤50	≤50

2.2 UPS Operating principles

2.2.1 Basic block diagram

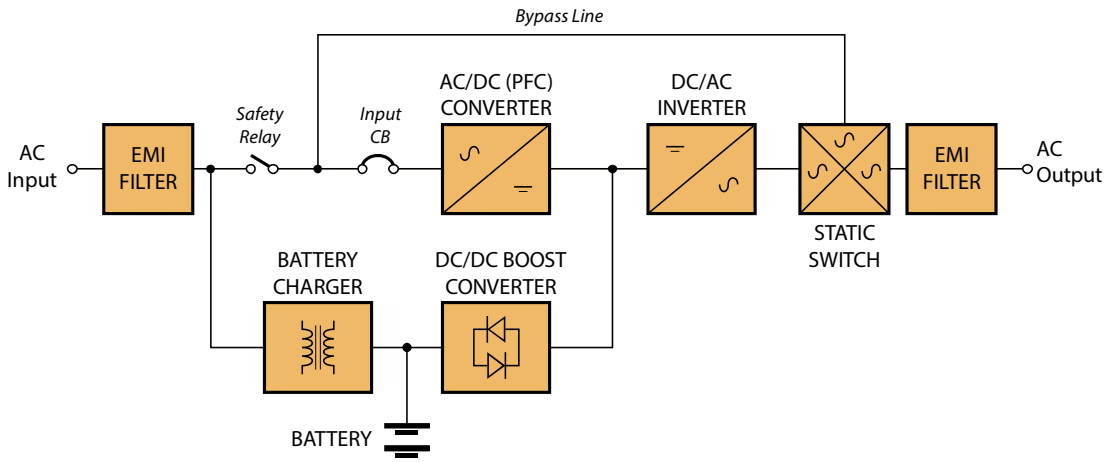

Figure 2.1 UPS Functional block diagram

EMI Filters

The UPS has an input and output EMI filter to reduce the effects of electromagnetic noise generated by the UPS on other adjacent equipment – e.g. reduces external radio interference.

Battery charger

A regulated battery charger, power from the AC Input supply, charges the battery whenever the input supply is available.

DC/DC Boost converter

In times of AC Input supply failure, the DC/DC Boost Converter turns on and boosts the battery voltage to a level suitable for use by the inverter. It provides a regulated DC output for the inverter while the battery voltage decays during discharge and includes voltage and current monitoring and overload protection.

AC/DC Converter

As its name suggests, the AC/DC Converter converts the AC Input supply into a controlled DC supply that is suitable for use by the inverter. The converter uses a leading-edge switched-mode technique which produces an input power factor of almost unity over its full operating range (0.99 at full rated linear load) and thereby maximises the UPS efficiency.

The converter can satisfy the inverter DC power demands over an AC Input voltage range of between 110V~300V which means that the battery is not called upon during power dips (brownouts), thereby maximising battery life and availability.

DC/AC Inverter

The inverter converts the DC voltage connected to its input, from the AC Input supply via the AC/DC converter or from the battery via the DC/DC converter, and produces a regulated AC Output voltage that is suitable to power the connected load equipment. The control logic associated with the Inverter power block is substantial, and in addition to the controlling the output sine wave voltage it also provides various levels of overload protection, frequency regulation and synchronisation, and output voltage error detection.

Static switch

The static switch provides a means of connecting the UPS AC Output (load) to the inverter output or the bypass line, which is connected directly to the UPS AC Input. The control logic within this power block will transfer the load to the bypass supply in the event of overload or UPS (inverter) malfunction. The load can also be transferred between the inverter and bypass line manually if required. Note that a controlled transfer can take place only if the inverter and bypass line are synchronised in frequency and phase.

2.2.2 System operating modes

ON-INVERTER operation

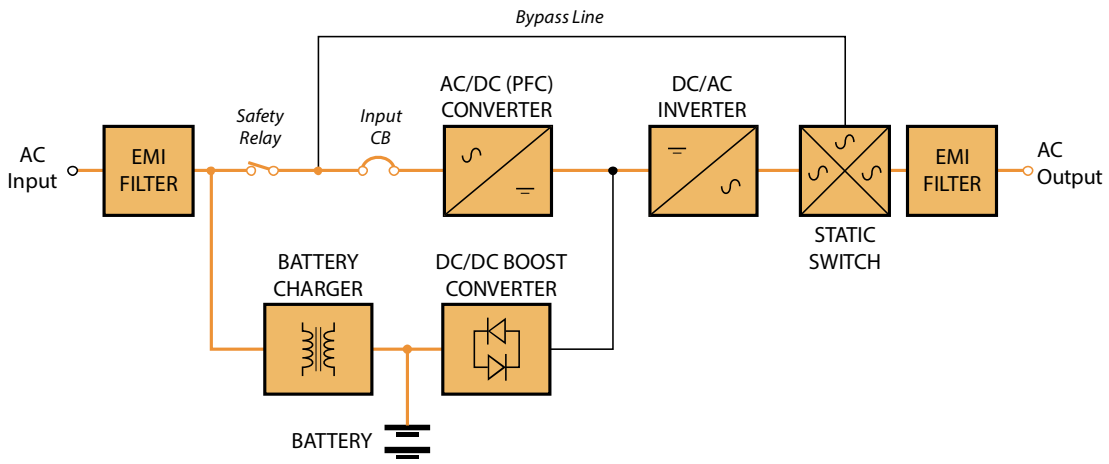

Figure 2.2 ON-INVERTER operation

- The battery is being permanently charged by the battery charger.
- The AC/DC converter is processing the AC Input supply and turning it into controlled DC.
- The inverter is converting the AC/DC converter output back into AC suitable for the load.
- The static switch is connecting the inverter output to the UPS AC Output terminals.

ON BATTERY operation

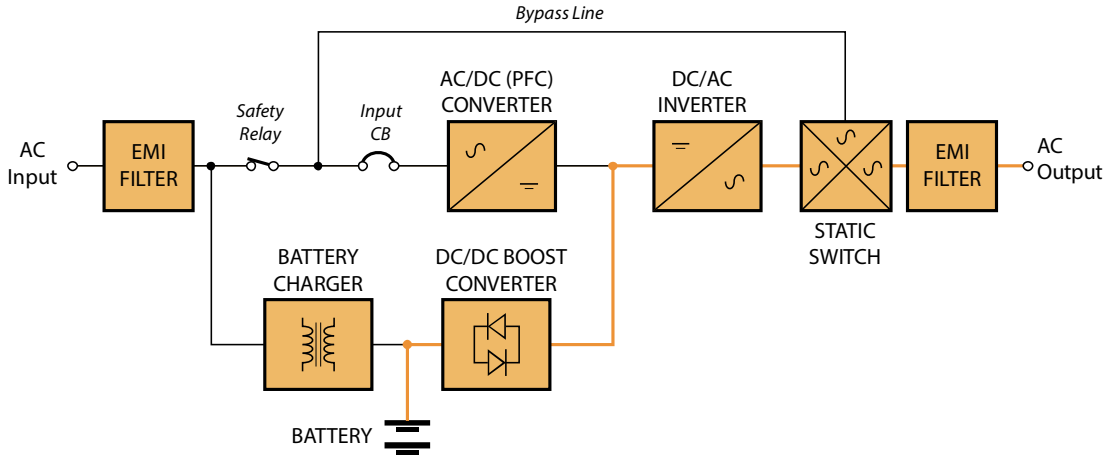

Figure 2.3 ON-BATTERY operation

- The battery is discharging through the DC/DC boost converter which presents the inverter with a controlled input voltage as the battery discharges.
- The Inverter is converting the DC/DC boost converter output back into AC suitable for the load.
- The static switch is connecting the inverter output to the UPS output terminals.
- The load will continue to receive its regulated power until the battery discharges to its low voltage cut-out level.

ON BYPASS operation

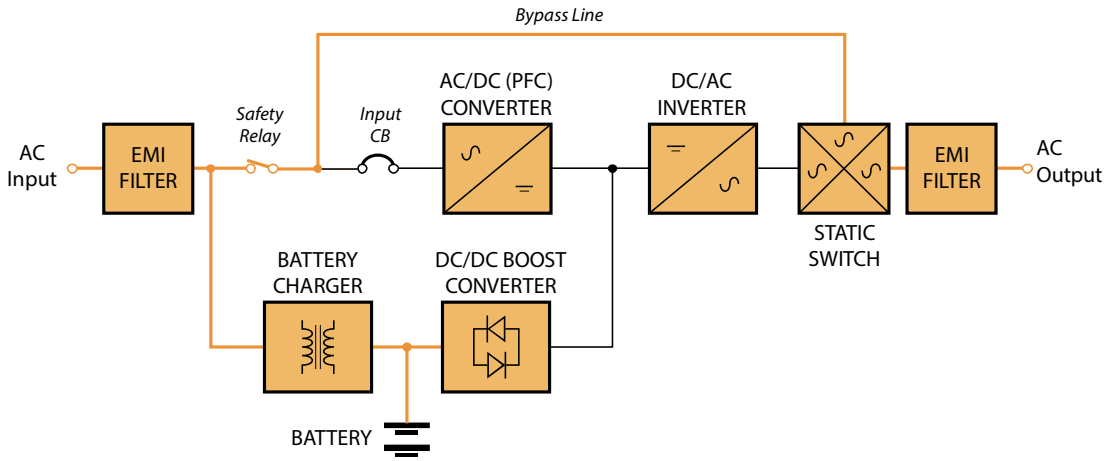

Figure 2.4 ON-BYPASS operation

- The battery is being permanently charged by the battery charger as long as the battery charger is still serviceable and able to operate. If the load has transferred to bypass due to an internal malfunction the battery charger may have shut down.
- The AC/DC converter, DC/DC boost converter and inverter are all inoperative.
- The static switch is connecting the bypass line to the UPS output terminals.

Note: When operating in this mode the load is unprotected from utility power disturbances.

2.3 Operator control panel

The UPS is controlled from the operator control panel located on the front of the unit.

The user-friendly UPS control panel comprises three areas:

Led indicators

A row of LEDs indicate the UPS input and output power status, together with a general fault warning.

LCD Display

Provides indication of the UPS operating mode together with the input, output, and battery supply parameters. It also displays error messages and UPS set-up data via a system of configuration menus.

Operator Keypad

The keypad contains 6 keys that are used to navigate through the UPS control menu system and turn the UPS OFF/ON.

Figure 2.5 Operator control panel

2.3.1 LED Indicators

Input mains supply status

This led is permanently ON if the mains supply is within in the normal operating range of 160~300 VAC, and flashes if the supply falls to 120~159 VAC. If the led is OFF it indicates a mains supply failure.

Programmable outlet status

The programmable outlets are normally connected to less critical loads which can be shed when the utility power fails. This reduces the load on the battery as it discharges and thereby increases the back-up time for the more critical loads which are connected to the unswitched UPS outlet(s). The indicators are permanently ON when the outlets are live.

Bypass supply status

This led is permanently ON when the UPS is operating in the ECO mode and flashes when the load is transferred to bypass – either manually or due to a detected fault.

UPS fault indication

This LED illuminates to indicate the presence of a fault condition within the UPS that needs attention. It is usually accompanied by an audible alarm.

2.3.2 Operator keypad

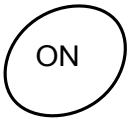

ON Button

This button is used to turn ON the UPS and activate certain functions when operated in combination with other buttons (as described later in this chapter). The button must be pressed for approximately one second to turn ON the UPS – accompanied by double 'beep'.

This symbol shows that the ON button is also used to cancel the audible alarm. When the alarm is cancelled, the audible warning will turn OFF but the alarm LED will remain ON if the fault is still present.

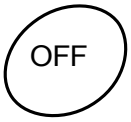

OFF Button

This button must be pressed for approximately one second to turn OFF the UPS – accompanied by double 'beep'.

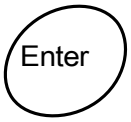

ENTER Button

The ENTER button is used to select a parameter from the UPS monitoring and configuration menus.

UP (BACK) Button

This button is used to navigate UP through the UPS menus, or change a menu parameter. It is also used with the ON button to manually transfer the load between the UPS and bypass supply.

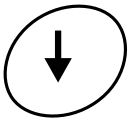

DOWN (NEXT) Button

During normal operation, this button is used to scroll through the metered parameters shown on the LCD display. It is also used in conjunction with the ON button to access the UPS configuration menus.

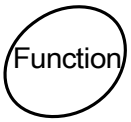

FUNCTION Button

This button is used to access the UPS configurations display menu.

2.3.3 LCD Display

The LCD display contains a row of warning symbols, a mimic diagram which indicates the power path through the UPS, a battery status indicator and a multi-function 3-digit numerical display which can be selected to indicate a range of operating parameters. Each of these areas are described below.

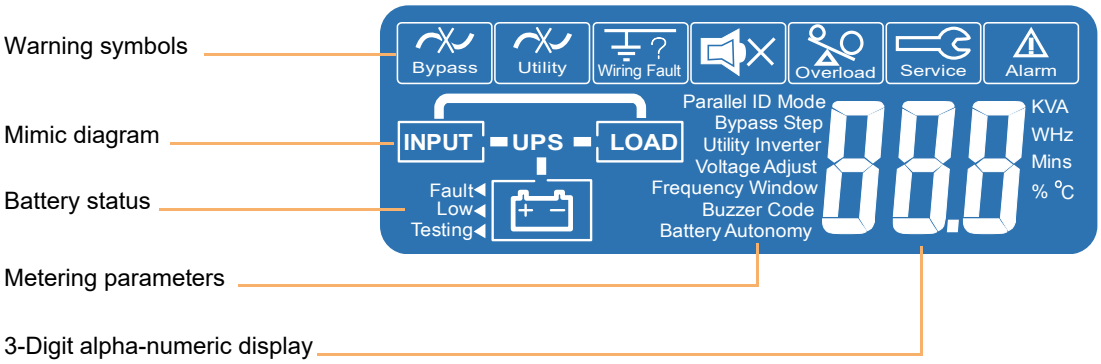

Figure 2.6 LCD Display

Warning symbols

Bypass input abnormal:

UPS fails to transfer to bypass, bypass abnormal in ECO mode

Utility input abnormal:

The utility mains supply is outside the UPS pre-set operating window

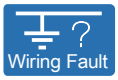

Wiring fault:

Site wiring problem such as reversed Line-Neutral connection

Alarm buzzer silent

The alarm buzzer has been silenced or disabled

Overload:

The UPS output is overloaded

Service:

The UPS is operating in its service mode

Alarm:

An alarm condition is present. This remains active after the audible alarm is reset if the alarm still exists.

Mimic diagram

The LCD Mimic diagram indicates the existing power flow through the UPS. The `INPUT`, `UPS`, `LOAD` and `BATTERY` symbols are permanently shown on screen and their interconnecting lines appear, or disappear, depending on the UPS mode of operation – see the table below.

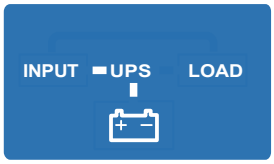

UPS OFF

This mimic is displayed when the utility power is first applied to the UPS, or if the UPS is turned OFF. It shows that the battery is being charged from the utility supply (`INPUT`) but the `LOAD` is not connected to the UPS, and is therefore unpowered.

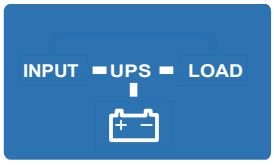

ON INVERTER

This mimic is displayed during normal UPS operation. It shows the battery being charged from the utility supply (`INPUT`) and the `LOAD` connected to the `UPS` output (Inverter), and is therefore being supplied with processed, backed-up power.

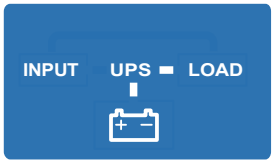

ON BATTERY

This mimic is displayed if the utility supply fails. It shows the battery now providing the `UPS` (Inverter) and `LOAD` power. The battery will sustain the UPS output until it is fully discharged, whereupon the UPS will shut down.

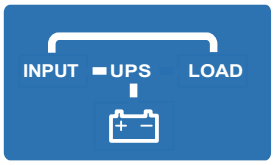

ON BYPASS

This mimic is displayed if the UPS develops a fault, or is overloaded, whereupon the `LOAD` is transferred to the bypass line and connected directly to the utility supply (`INPUT`). The battery will remain on charge if the UPS battery charger is healthy.

Battery status indicators

There are three 'flags' to the left of the battery icon which indicate the battery status.

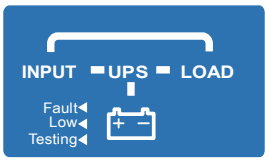

Fault

Indicates a battery fault and is normally accompanied by an illuminated Alarm warning symbol and an audible warning from the buzzer. An error code will be shown on the LCD 3-digit alphanumeric display which helps with fault identification.

Low

When the UPS is operating `ON BATTERY` the Low flag will turn on when the battery is nearing its end of discharge. This is accompanied by an increase in the number of short successive beeps produced by the alarm buzzer.

Testing

The Testing flag flashes when a battery test is operation – see paragraph 4.5.2.

Meter Display

When the UPS is turned ON, you can use the `DOWN` and `UP` buttons to scroll through the measurement display screens. The display sequence is as numbered in the table below and loops around in either direction.

1	Utility Voltage (V)	4	Inverter Frequency (Hz)	7	Battery Voltage (V)
2	Utility Frequency (Hz)	5	Inverter Load %	8	Battery Autonomy (mins)
3	Inverter voltage (V)	6	Inverter Load (A)	9	UPS Temperature (°C)

2.4 UPS Rear view

2.4.1 Communication Ports

Several communication options can connected to the PowerWAVE 1000 (1-3kVA). These are described briefly below with further details provided in Chapter 7 (Options).

USB port (Figure 2.7 item 3)

A USB type B socket is provided to allow the UPS to be connected to a PC using a standard USB peripheral interface cable. The USB communication protocol complies with USB version 1.0 (1.5 Mbps) and USB HID version 1.0. This facility can be used in conjunction with UPS monitoring and shut down software (not supplied).

RS-232 Interface port (Figure 2.7 item 2)

The RS-232 port allows the UPS to be connected to a PC and provides the same functions as the USB port.

Emergency power off (EPO) (Figure 2.7 item 1)

If an external emergency power off (EPO) facility is required, the external circuit must be connected to the two pin plug located on the rear panel. A plug-in connector with screwed terminal connections is supplied ready fitted to the EPO socket to simplify the connection of the external cable if the UPS is located in a confined space, such as when it is rack mounted. The EPO input requires a normally-open contact which closes to active the EPO function. If the UPS is shut down by the EPO input (closed), it has to be restarted manually after the EPO input is removed (opened).

Optional interface cards (Figure 2.7 item 4)

An optional SNMP/ CS141 interface card can be fitted in the card slot to enable the UPS to be integrated into a network monitoring and control system.

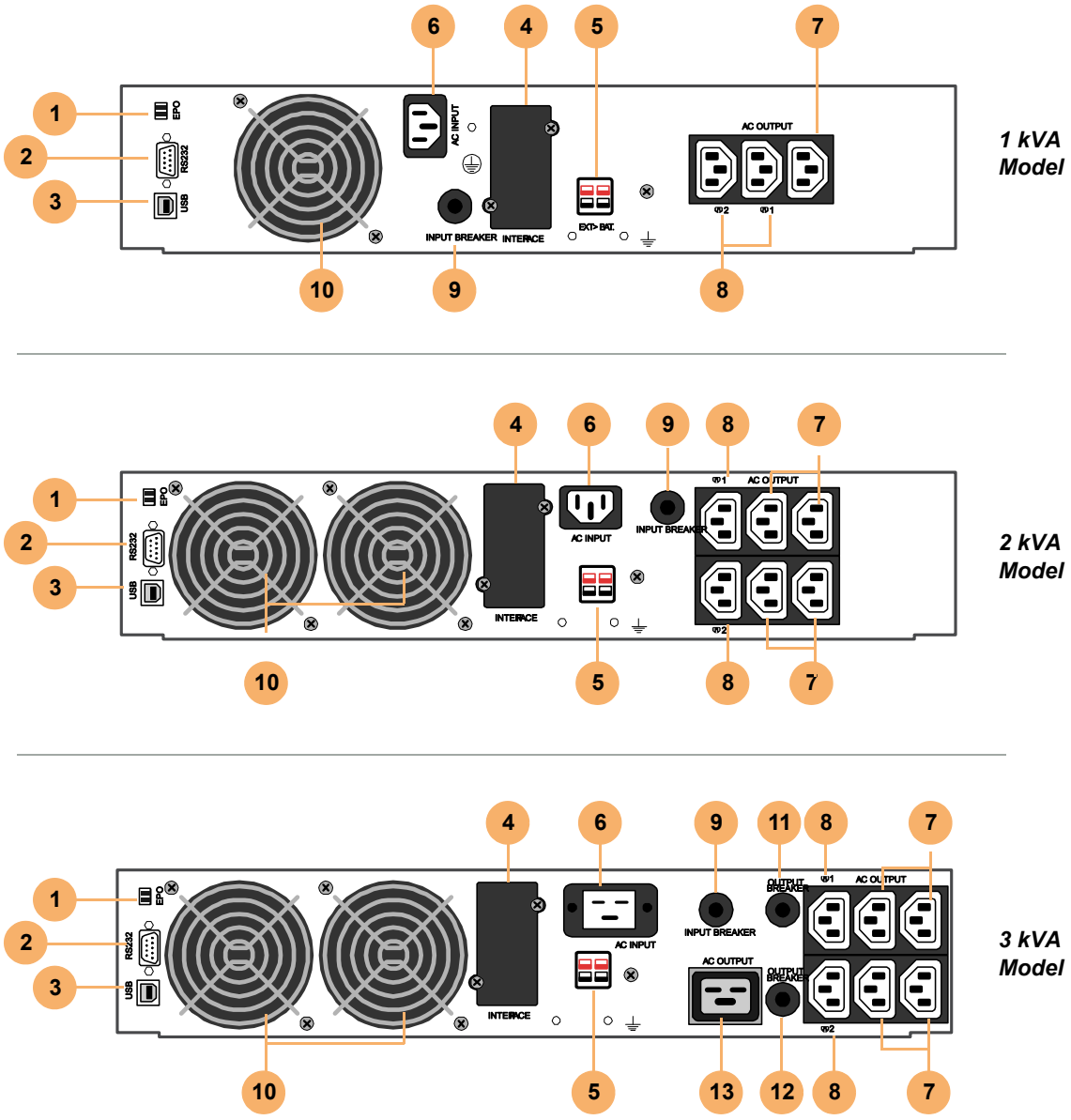

1	Emergency Power Off (by dry contact)	**7**	Unswitched AC Outlets
2	RS232 Port	**8**	Two switched (programmable) AC outlets
3	USB Port	**9**	Mains input supply circuit breaker
4	Communications card options slot	**10**	Cooling fans
5	External battery connector	**11/12**	Output circuit breaker (CB) for AC Outlets 7/8
6	AC Input (utility mains) power socket	**13**	16A Unswitched AC Outlet

Figure 2.7 Rear panel detail

2.5 External battery cabinet

An external battery pack can be connected to the UPS to extend the UPS autonomy time, where required. The batteries are contained in a purpose-designed, matching cabinet which can be installed as a stand-alone unit or attached to the UPS cabinet to form a single tower assembly.

When the external battery cabinet is rack-mounted it should be installed immediately below the UPS cabinet.

Note: If required, up to three external battery cabinets can be connected to the UPS – see Figure 2.8.

The following external battery cabinets are available:

		230V–1 kVA	230V– 2 kVA / 3 kVA
Battery voltage	VDC	36V	72V
Battery number & capacity	Ah	6x 12V/ 7Ah-9Ah	12x 12V/ 7Ah-9Ah
Battery strings		2x Strings of 3 batteries	2x Strings of 6 batteries.
Dimensions (WxHxD) in/mm	in mm	440 x 88(2U) x 405 17.3 x 3.5(2U) x 15.9	440 x 88(2U) x 600 17.3 x 3.5(2U) x 23.6
Weight (Empty)	kg / lb	4.7 kg / 10.4 lb	4.9 kg / 10.8 lb
Weight (with 9Ah Batteries)	kg / lb	28.15 kg / 62 lb	37.8 kg / 83.33 lb

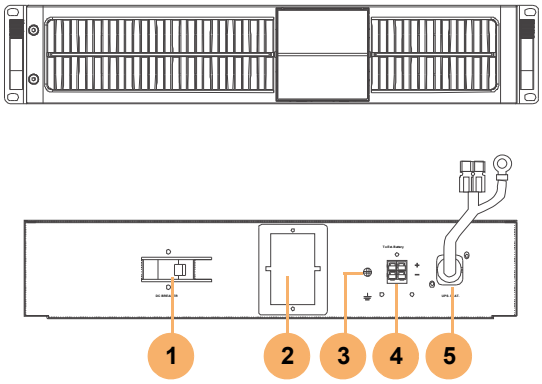

1 DC Breaker (option) – Battery over-current protection

2 DC Fuses – Battery over-current protection

3 Earth – Safety earth bonding

4 Input connector – For additional extended battery cabinets

5 DC Power cord – Battery cable to UPS cabinet

Figure 2.8 External battery cabinet

Up to three external battery cabinets can be added to the UPS system by connecting the output cable of the first cabinet (5) to the input connector of the second cabinet (4).

2.6 Warranty

The PowerWAVE 1000 (1-3kVA) UPS is supplied with a limited warranty that the UPS and its component parts are free from defects in materials and workmanship for a period of one year from the date of original commissioning, or fifteen months from the date of original delivery, whichever is the sooner. This warranty is the only warranty given and no other warranty, express or implied, is provided.

This warranty is invalidated if the UPS is used without having first been commissioned by a fully trained and authorised person. This warranty does not apply to any losses or damages caused by misuse, abuse, negligence, neglect, unauthorised repair or modification, incorrect installation, inappropriate environment, accident, act of God or inappropriate application.

If the UPS fails to conform to the above within the warranty period then Kohler Uninterruptible Power Ltd. will, at its sole option, repair or replace the UPS. All repaired or replaced parts will remain the property of Kohler Uninterruptible Power Ltd.

As a general policy, Kohler Uninterruptible Power Ltd. does not recommend the use of any of its products in life support applications where failure or malfunction of the product can be reasonably expected to cause failure of the life support device or to significantly affect it's safety or effectiveness. Kohler Uninterruptible Power Ltd. does not recommend the use of any of its products in direct patient care. Kohler Uninterruptible Power Ltd. will not knowingly sell its products for use in such applications unless it receives in writing assurances satisfactory to Kohler Uninterruptible Power Ltd. that the risks of injury or damage have been minimized, the customer assumes all such risks and the liability of Kohler Uninterruptible Power Ltd. is adequately protected under the circumstances

CAUTION: *The UPS system may contain batteries which must be re-charged for a minimum of 24 hours every six months to prevent deep-discharging. Batteries that have been, for whatever reason, deeply-discharged are not covered by the warranty.*

2.7 Extended Warranty

The Standard Warranty may be enhanced by protecting the UPS with an Extended Warranty Agreement (maintenance contract). An Extended Warranty Agreement enhances the standard warranty by providing:

- Regular preventative maintenance inspections
- Guaranteed speed of response to operational problems
- 24 hour telephone support
- Fully comprehensive (excluding batteries) cover

Contact the Service Support Hotline on 0800 731 3269 (24Hr.) for further details

2.8 Additional Service/Maintenance Support

If you are interested in obtaining an extended warranty for your PowerWAVE 1000 (1-3kVA), or require service/ maintenance support for any other UPS you may have, please contact Kohler Uninterruptible Power Ltd. at the following address:

Kohler Uninterruptible Power Ltd.
Woodgate
Bartley Wood Business Park
Hook
Hampshire, United Kingdom
RG27 9XA

Tel:	+44 (0)1256 386700 0800 731 3269 (24Hr.)
Email:	ukservicesales.ups@kohler.com

3 Installation

CAUTION: *Read the safety information contained in Chapter 1 before installing the UPS.*

3.1 Unpacking the UPS equipment

The manufacturer has designed robust packaging for your product to help ensure it reaches you in good order; however, accidents and damage may sometimes occur during shipment. You should inspect the UPS carefully upon receipt and if there are signs of damage you must inform the carrier and dealer immediately.

WARNING: Under no circumstances should you connect electrical power to a damaged unit or attempt to start it using its internal batteries.

Save any recyclable packaging for re-use or dispose of it appropriately and correctly.

1. Remove the UPS from the packing carton.
2. Check the package contents. The standard unit includes:
   a) User Manual.
   b) IEC output cables (for UPS with IEC sockets only).
   c) IEC input power cable (for UPS with IEC sockets only).
   d) A UPS accessories kit which allows the UPS to be configured for Tower or Rack installation.
3. Before proceeding, check the data plate on the rear of the UPS and verify that the unit's voltage and power ratings comply with the equipment order details. Contact the dealer immediately if this is incorrect.

3.2 Selecting a suitable installation location

As the UPS weighs several kilograms, the location where it is to be installed must be able to safely support its weight.

To ensure correct operation and a long service life, always install the UPS in accordance with the following environmental standards:

- The ambient temperature and humidity must be within the limits specified in Chapter 8 of this manual. The battery temperature must be maintained at 20°C to ensure its lifespan is not reduced
- The UPS is not designed for outdoor use
- The installed location must be clean, dry and free of excessive dust
- The UPS must not be installed in a corrosive environment or in the vicinity of flammable items
- The ventilation grills at the front of the UPS and extractor fans at the rear of the UPS must not be obstructed
- The UPS equipment must be installed with the clearances illustrated in Figure 3.2 as a minimum

3.2.1 Clearances

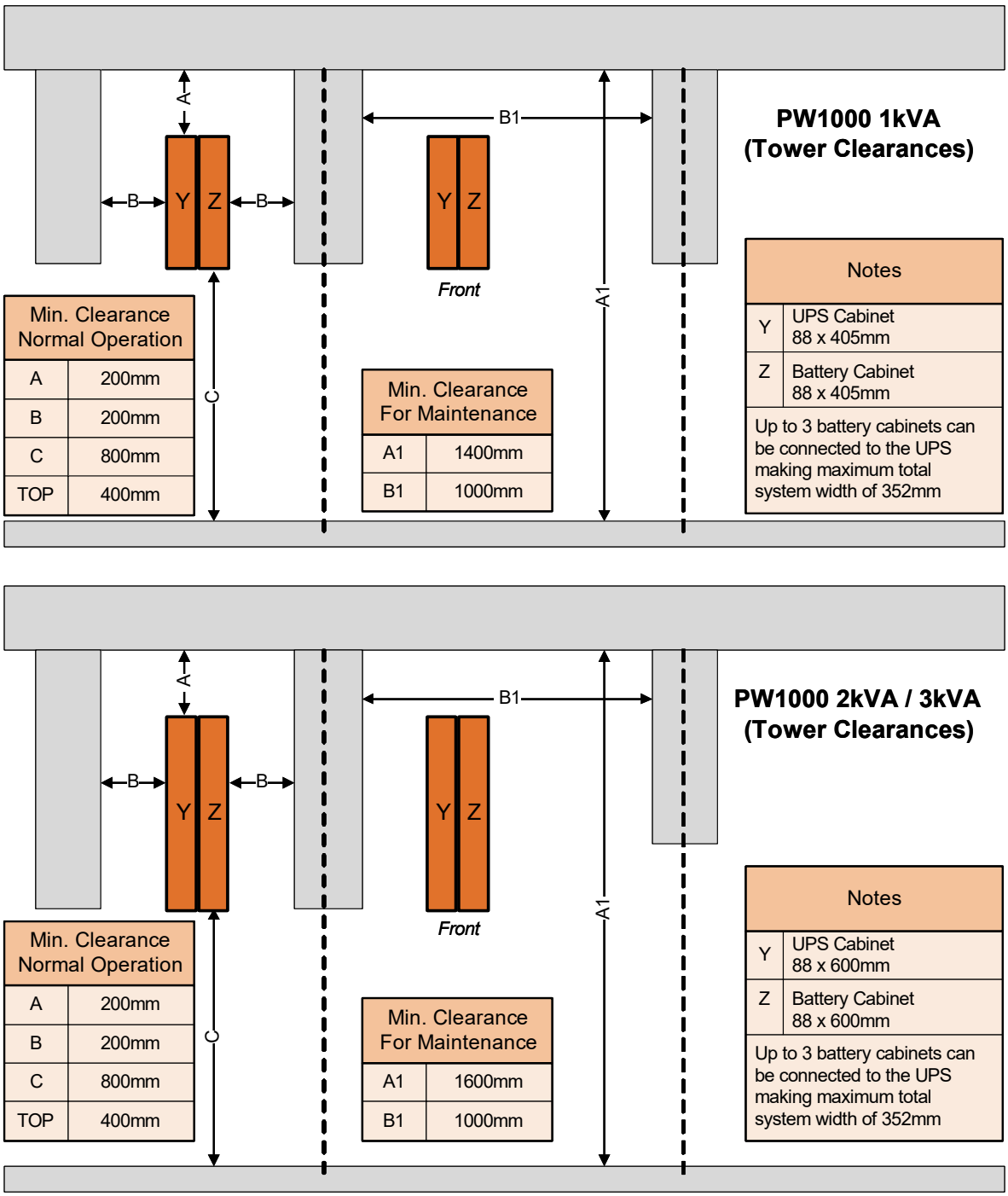

Figure 3.1 Tower installation clearances

Figure 3.1 shows the required clearances when planning a PW1000 tower installation. The total width of the system hardware can range from 88mm, for a stand-alone UPS cabinet, up to 352mm where the maximum of three (optional) battery cabinets are attached to the UPS cabinet – only one battery cabinet shown in the diagram above.

The left hand diagrams show the 'operating' clearances necessary to provide adequate cooling. For maintenance, at least 800mm side access is required, and where necessary the cables connected to the UPS should be made sufficiently long to allow the UPS to manoeuvred to a position where the clearances shown in the right hand diagrams are obtainable.

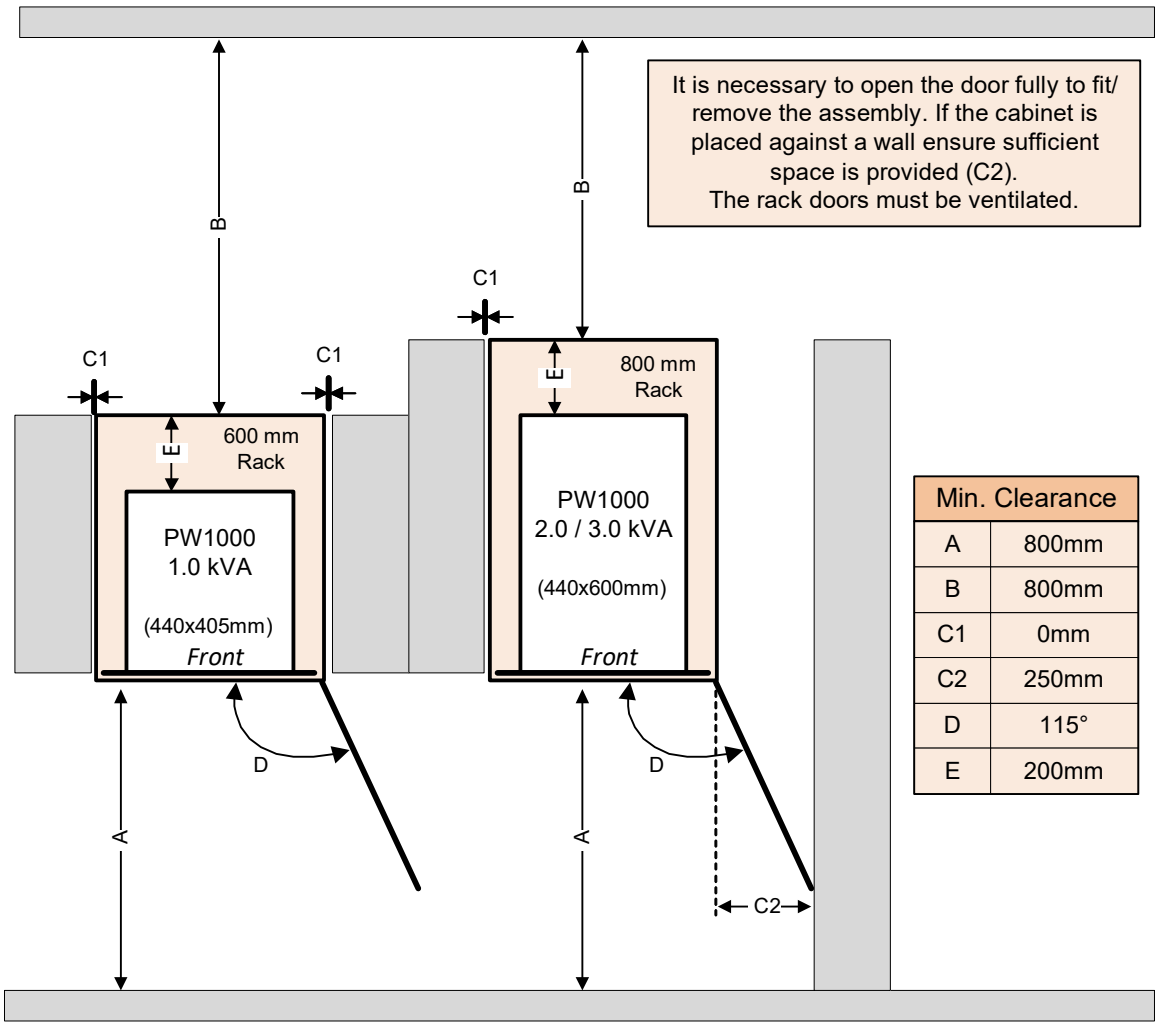

Figure 3.2 Rack mounted installation clearances

When the UPS is rack-mounted a minimum of 200mm should be available between the rear of the UPS and the back of the rack cabinet to enable adequate ventilation and provide space for cabling. It is permissible to install the PW1000 1kVA model in a cabinet with a depth of 600mm, although this will only provide 195mm rear clearance rather than the desired 200mm shown in the above diagram.

The rack cabinet must have a ventilated door and a minimum clearance of 800mm must be provided at the front and rear of the cabinet to allow full UPS access for installation and maintenance.

3.3 Assembling the UPS mounting hardware

3.3.1 Hardware accessories pack

The accessories pack which is shipped inside the UPS packing carton contains all the hardware required to safely install your UPS as a tower or rack-mounted system.

A	x4	Tower feet	**E**	x8	M3 x 6mm Countersunk
B	x2	Rack mounting handles	**F**	x6	M4 x 8mm Countersunk
C	x2	Rack mounting side-plates	**G**	x1	EPO connecting socket
D	x8	M3 x 6mm Domed			

Figure 3.3 Accessories pack

3.3.2 Stand-alone Tower assembly

Turn the UPS on its side and, using screws (D) provided, attach the four tower feet (A) to the base of the enclosure as shown in Figure 3.4.

Note: You will have to remove the M3 screws already fitted to the UPS side panels in order to make way for the new feet attachments.

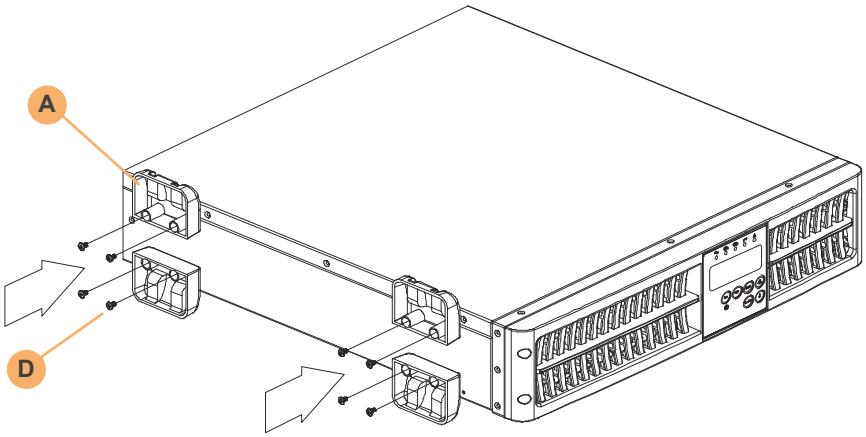

Figure 3.4 Tower assembly

4. Carefully lift the assembly and stand it on its feet.
5. If necessary, rotate the UPS LCD control panel so that it is correctly orientated. To achieve this, carefully pull the control panel forward to unclip it from its mounting, rotate it to the correct angle, then relocate it and press it back into place.
6. This completes the tower hardware configuration.

3.3.3 Rack installation

The PowerWAVE 1000 (1-3kVA) UPS and battery enclosure(s) can be installed on adjustable mounting rails fitted in a standard 19 inch rack. If the UPS is to be connected to an external batteries, you should install the battery cabinet(s) immediately below the UPS following the same procedure as for mounting the UPS. The UPS/Battery enclosures are then connected together using the supplied cable.

Due to their relative weights, it is preferable to mount UPS and battery enclosures near the bottom of the rack.

Key Point: Always mount the batteries below the UPS and as far away from other heat-generating sources as possible.

Rack mounting handles

When rack-mounting the UPS, mounting handles are attached to the front of both side of the UPS. These are used to help you when inserting/removing the UPS and also provide a means of securing the UPS once it is in position.

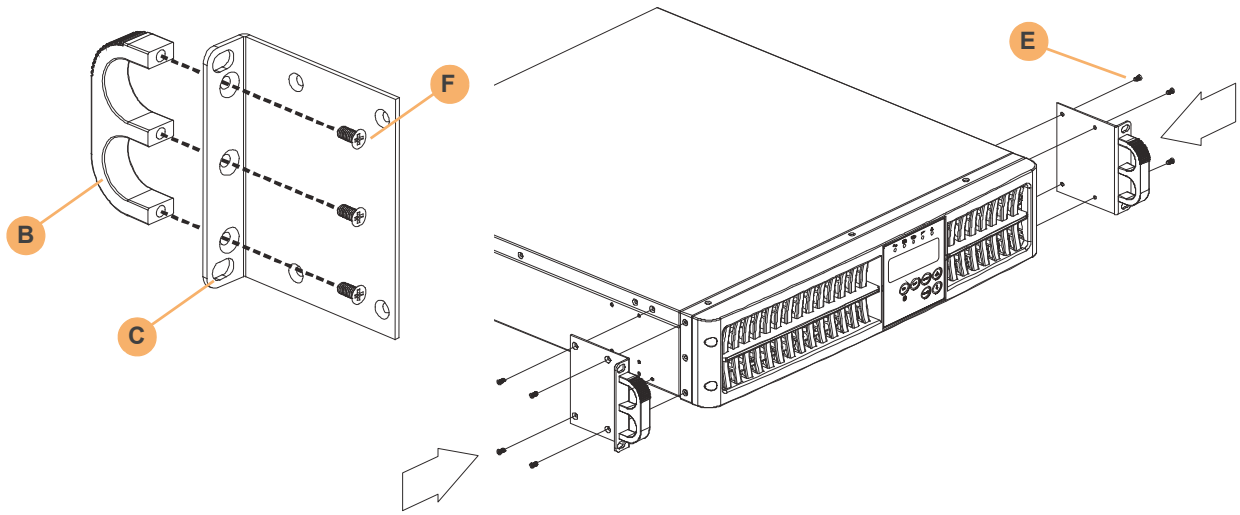

Figure 3.5 Rack mounting handles

1. Attach the rack-mounting handles (B) to the side-plates (C) using three M4x8mm countersunk screws (F).
2. Secure the side-plates to the front of both sides of the UPS, as shown, using four M3x6mm countersunk screws (E).

   Note: You will have to remove the M3 screws already fitted to the UPS side panels in order to make way for the new handle attachments.

Adjustable mounting rails

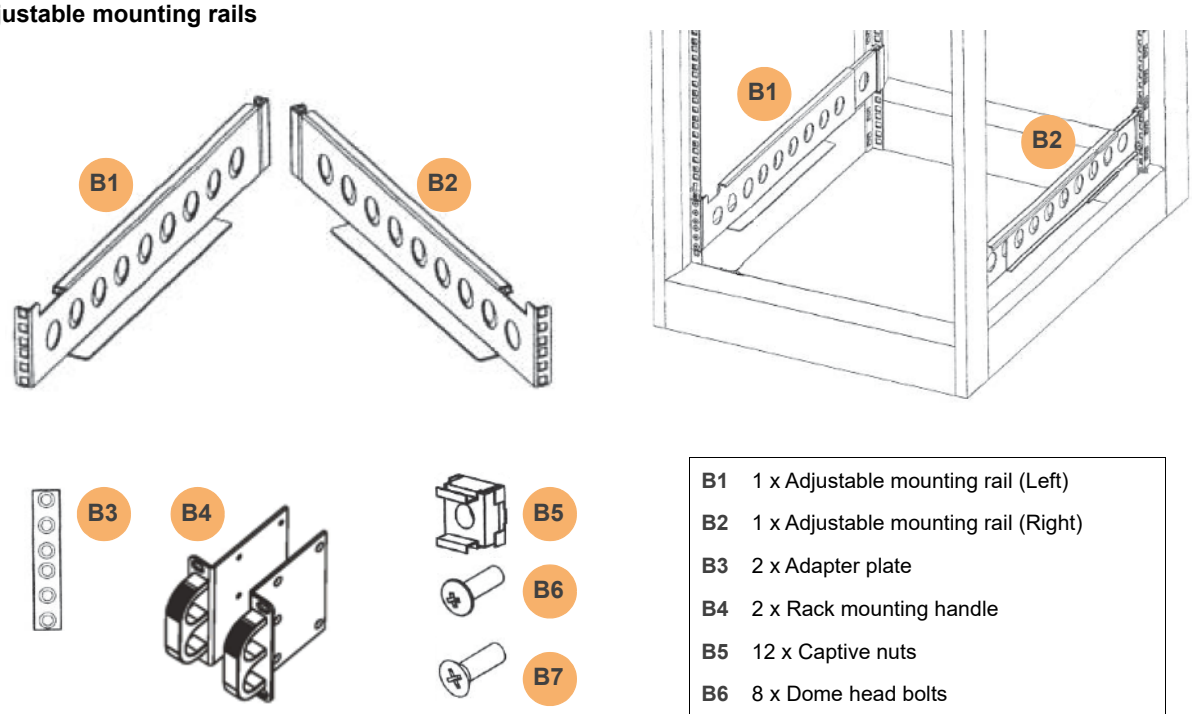

B1	1 x Adjustable mounting rail (Left)
B2	1 x Adjustable mounting rail (Right)
B3	2 x Adapter plate
B4	2 x Rack mounting handle
B5	12 x Captive nuts
B6	8 x Dome head bolts
B7	4 x Countersunk bolts

Figure 3.6 UPS Rack mounting kit

The adjustable mounting rail kit contains a pair of mounting rails (left and right handed) that are fitted to each side of the cabinet and secured by two screws – front and back. The length of the rails is adjustable between 543 mm and 925 mm, making them compatible with most standard 19 inch rack assemblies of 600 mm to 900 mm depth.

1. Extend the adjustable mounting rail and hold in place *(see Figure 3.6)*.
2. Align the two holes in the back of the adjustable mounting rail with the holes in the cabinet's vertical fixing rail *(see Figure 3.7)*.
3. Identify and mark the two vertical fixing rail holes to which the adjustable mounting rail is to be fixed.
4. Clip captive nuts (B5) to the two vertical fixing rails holes identified above.
5. Secure the rear of the adjustable mounting rail to the vertical fixing rail using two dome headed bolts (B6).
6. With the rear of the adjustable mounting rail secured in place, and the adjustable mounting rail extended, identify the four fixing points that will align with the equipment mounting handles and clip four captive nuts to the required fixing points.
7. Secure the adjustable mounting rail to the rack's front vertical fixing rail using two countersunk bolts (B7) and adapter plate (B3) *(see Figure 3.8).*
8. Repeat the above steps to fit the second adjustable mounting rail.

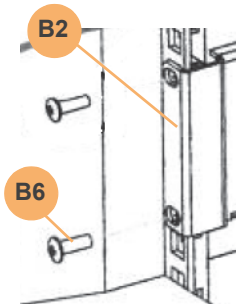

Figure 3.7

WARNING: The UPS / Battery enclosure is heavy. When lifting the equipment ensure that adequate manpower is available and any mechanical lifting aids are suitable for the weights involved.

WARNING: When inserting the enclosure into the rack ensure that it is held level. If it is inserted at an angle it could pivot about the back of the mounting rail runners if the front of the enclosure is tilted upwards.

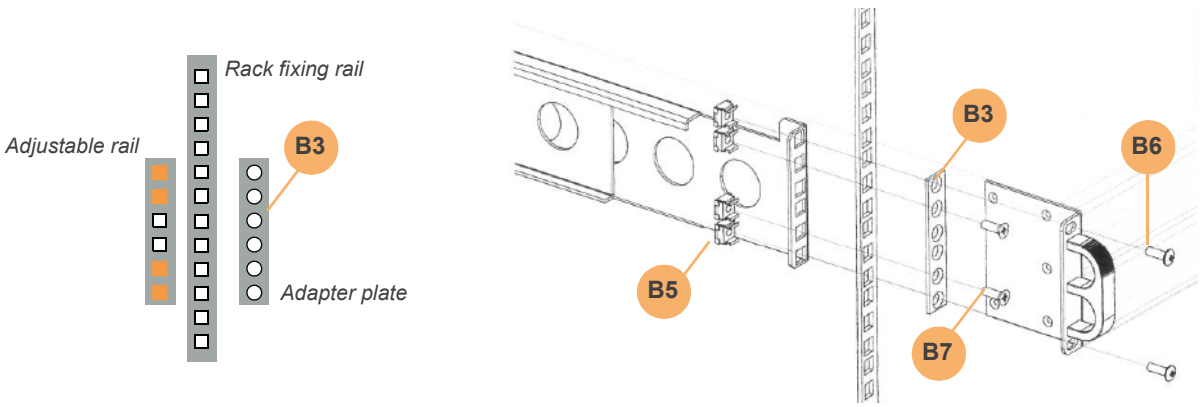

Figure 3.8 2U Adjustable rail front mounting

9. When both mounting rails are fitted, carefully insert the UPS / Battery enclosure into the rack so that it rests correctly on the rails. Then secure it in place using the four dome head bolts (B6) as shown in Figure 3.8.

3.4 Assembling the external battery cabinet mounting hardware

If an optional external battery cabinet is included as part of the UPS system it can be installed in one of three ways:

- as a stand-alone tower unit located adjacent to, but independent of, the UPS cabinet
- as a ‘combined tower,’ where the battery cabinet is attached to the UPS cabinet to form a single tower assembly
- rack-mounted immediately below the UPS cabinet

The hardware accessories pack which is shipped inside the packing carton contains all the hardware required to safely install the battery cabinet using either of these methods.

A	x4	Tower feet	**F**	x6	M4 x 8mm Countersunk
B	x2	Rack mounting handles	**G**	x2	Cabinet attachment link
C	x2	Rack mounting side-plates	**H**	x1	6-pin Anderson securing plate
D	x8	M3 x 6mm Domed	**I**	x1	4-pin Anderson securing plate
E	x8	M3 x 6mm Countersunk			

Figure 3.9 External battery cabinet hardware kit

3.4.1 Stand-alone tower installation

1. Attach the four tower feet to the base of the cabinet in the same manner described in paragraph 3.3.2 for the main UPS cabinet.
2. Stand the battery cabinet on its feet and place it adjacent to the UPS cabinet, as shown below.

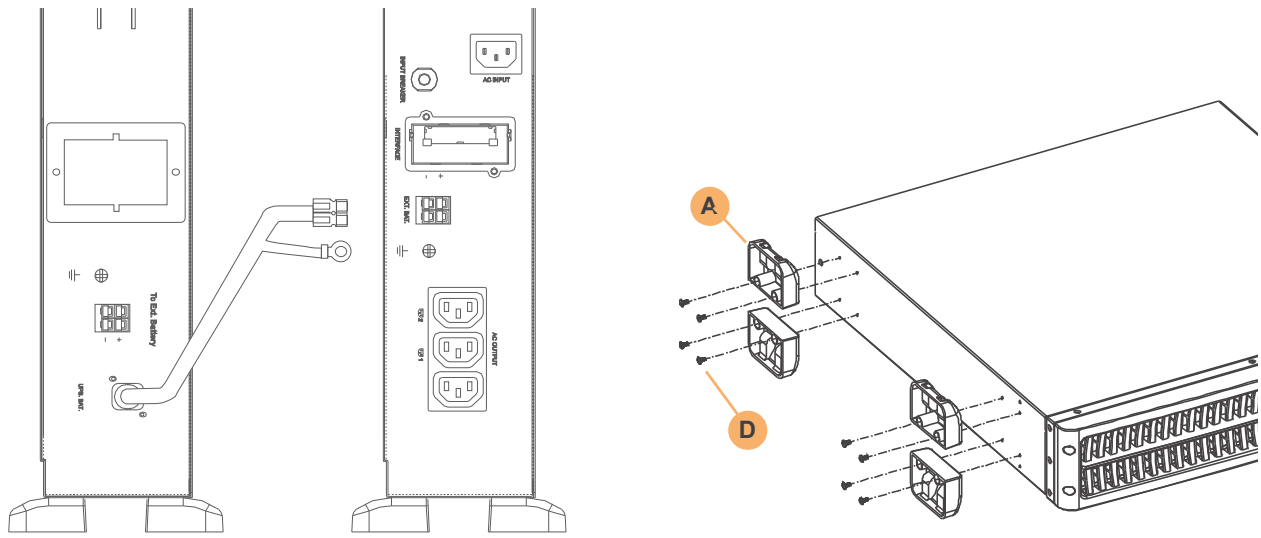

Figure 3.10 Battery cabinet tower assembly

Connect the battery cabinet to the UPS

1. On the UPS back panel, remove the screw securing the hinged battery connector cover plate and let the cover plate fall open.
2. Connect the DC cable from the battery cabinet to the external battery connector on the back of the UPS cabinet.
3. With the battery cable inserted, fit the Anderson securing plate over the battery connector plug.
4. Attach the Anderson securing plate (H) or (I) to the UPS back panel using the screw you previously removed from the hinged cover plate.
5. Remove the screw from the protective earth terminal on the UPS rear panel.
6. Connect the earth tail from the DC cable to the UPS cabinet chassis earth.
7. This completes the mechanical installation.

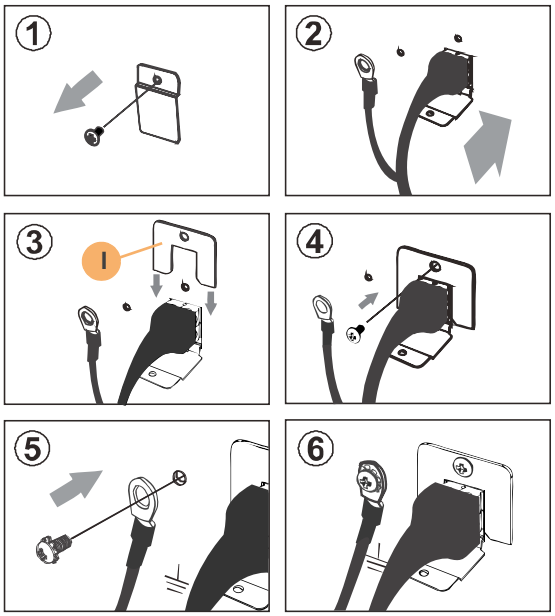

Figure 3.11 Battery cable connection

3.4.2 Combined tower installation

Figure 3.12 shows the method used to join the battery cabinet to the UPS cabinet. This entails fitting a small cabinet attachment link (G) between the cabinets at the top and bottom and only fitting the feet to the cabinets' outer-edge. Proceed as follows:

1. Determine which side the battery cabinet is to be installed relative to the UPS cabinet (either side is permissible).

Remove the centre screws from mid-way along the cabinet inner-sides where the attachment links (G) are to be fitted. Note that a link is fitted to the top and bottom of the cabinets, as shown in Figure 3.12.

2. Lay the battery cabinet on its side and attach the feet to its outer edge only Figure 3.10.
3. With the battery cabinet still on its side (with the feet pointing downwards), carefully place the UPS cabinet on top of the battery cabinet and fit the two attachment links using the supplied dome-headed screws (D). Ensure that the front of the cabinets are correctly aligned before you fully tighten the screws.

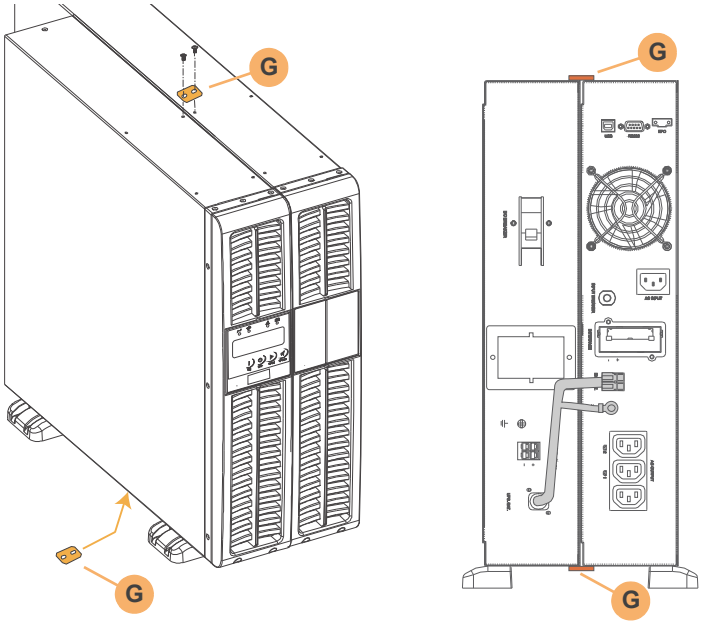

Figure 3.12 Combined tower installation

4. With the two cabinets now firmly held together, fit the two outer feet to the UPS cabinet.
5. Carefully stand the assembled tower upright and move to its intended installation location.

Connect the battery cables to the UPS as described above and illustrated in Figure 3.11.

6. This completes the mechanical installation.

3.4.3 Rack installation

When the battery cabinet is rack-mounted, install in the same manner used to install the UPS *(see paragraph 3.3.3)*.

3.5 Electrical installation

Carry out the following electrical installation procedure once the UPS, and external battery cabinet where applicable, have been mechanically installed at their intended location.

1. Connect the UPS `AC INPUT` power socket to the utility mains supply using the supplied power cable.

WARNING: Do not disconnect the power cable while the UPS is operating as the cable provides the UPS protective earth connection.

If an external battery cabinet is used, connect the battery power cable and protective earth cable to the UPS as shown in Figure 3.11.

WARNING: Ensure you use the correct external battery cabinet. The 1kVA UPS uses a 36V external battery pack whereas the 2kVA/3kVA UPS uses a 72V battery pack.

2. If the UPS is installed in an equipment rack, connect a protective earth bonding cable between the rack and the UPS earth screw located adjacent to the battery connector Figure 2.7.
3. The optional UPS communications card and other optional facilities, such as the emergency power off cables, can be connected at this stage or installed later (see Chapter 7 for details)

3.6 Initial UPS power-up and commissioning

The UPS operating parameters are set to default values by the manufacturer. These basic settings can be changed to suit a particular site or application requirements using the following commissioning procedure.

CAUTION: *The commissioning procedure must be carried out by an electrically-trained engineer.*

1. If the load equipment is connected to the UPS, either disconnect it or ensure that the load power switches are OFF.
2. Connect utility mains power to the UPS and turn on the UPS following the instructions in paragraph 4.2.1, but do not connect power to the load at this stage.
3. Scroll through the `Functions` menu, as described in paragraph 4.5.3, and make a note of any operating parameters that require changing.
4. Make any required operating parameter changes as described in paragraph 4.5.4.
5. Turn off the UPS (paragraph 4.3.1) but leave the utility mains connected for at least four hours to charge the battery.
6. Once the battery is charged, turn on the UPS and carry out a battery test as described in paragraph 4.5.2.
7. If the battery test is successful, the UPS can be brought into operation.

CAUTION: *We recommend that the battery is charged for further 4 hours before you connect any mission-critical load to the UPS. This is to ensure that the battery is charged to a level that enables the UPS to perform to its full specification.*

8. Check all metered parameters to ascertain that the input/battery/output indications are correct.
9. Congratulations. Your UPS is now fully operational and providing protected power for your load.

4 Operation

4.1 Introduction

This chapter describes the UPS operating and set-up procedures.

The UPS is essentially a ‘plug-and-play’ unit and does not require a trained operator to turn it off and on.

Set-up procedures are included in this chapter to enable you to re-configure the UPS operating parameters to suit particular local requirements. The factory default settings are satisfactory for the majority of installations, but if you find it necessary to makes any adjustments this should be done before the UPS is put into service.

CAUTION: *If adjustment is necessary it should be carried out by an electrically-trained engineer who is aware of the effects on the system of any changes made.*

UPS Operating procedures

- *How to start the UPS (from utility mains) - see paragraph 4.2.1*
- *How to start the UPS (from battery) - see paragraph 4.2.2*
- *How the monitor the UPS input/output operating conditions - see paragraph 4.2.3*
- *How to turn off the UPS (from ON INVERTER or ECO Mode) - see paragraph 4.3.1*
- *How to turn off the UPS (from ON BATTERY Mode) - see paragraph 4.3.2*
- *How to disable the alarm buzzer operation - see paragraph 4.5.1*
- *How to perform a battery test - see paragraph 4.5.2*

UPS Set-up procedures

- *Functions menu - see paragraph 4.5.3*
- *Operating parameters setting menu - see paragraph 4.5.4*

4.2 UPS start-up procedures

4.2.1 How to start the UPS (from utility mains)

1. Connect the UPS AC INPUT to the utility mains supply using the power cable provided.
2. Ensure that the UPS output circuit breakers and battery breaker in the external battery cabinet (if used) are closed.
3. Connect the load equipment to the UPS AC OUTPUT power outlets – we recommend that the individual load power switches are turned OFF at this stage.
4. Turn ON the UPS utility mains supply.
   a) The UPS control system will boot-up and initially turn on all the LEDs and LCD symbols.
   (If the UPS fails to power-up, check that the input breaker is closed on the back of the unit.)
   b) After a few seconds the UPS fans will start, and the LEDs and LCD symbols will extinguish.
   c) This will be followed by the default UPS OFF screen. The LCD mimic should indicate the UPS OFF mode and the only active LED should be the green input mains LED (as shown here).
5. Verify that the indicated utility supply voltage is correct.

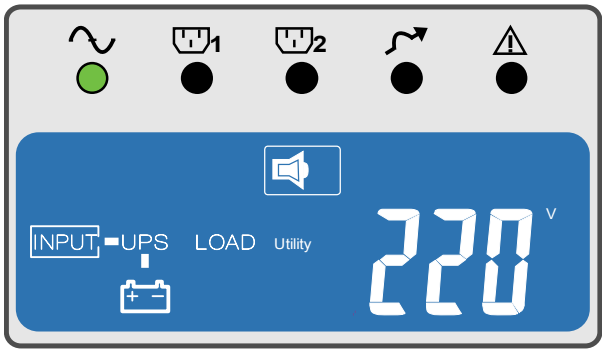

Figure 4.1

6. Press and hold the ON button until the buzzer beeps twice (1-2 seconds).
   a) UPS should turn ON.
7. IF THE UPS IS SET TO OPERATE IN ON INVERTER MODE (standard):
   a) The LCD mimic diagram should change to indicate the ON INVERTER mode.
   b) The two programmable power outlet LED indicators should change to Green.

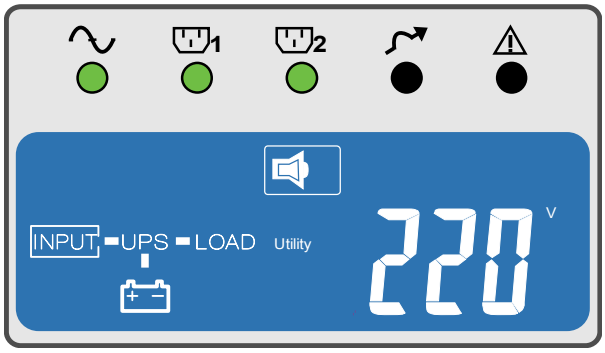

Figure 4.2

8. IF THE UPS IS SET TO OPERATE IN ECO MODE:
   a) The UPS should turn ON, as above, then after approximately 5 seconds the LCD mimic diagram should change to indicate the ON BYPASS mode.
   b) The yellow BYPASS LED should turn on.
9. Check the UPS output voltage and frequency on the LCD meter.
10. Although not essential, we advise that you perform a battery test before you turn on the load to ensure that the UPS batteries perform correctly. The battery test procedure is detailed in paragraph 4.5.2.
11. If the battery test is satisfactory, and UPS output voltage is correct, turn ON the load power switches.

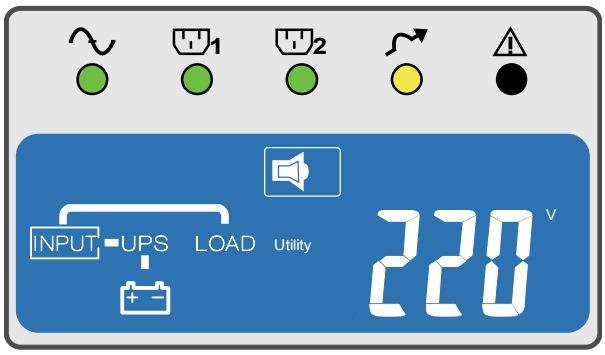

Figure 4.3

12. Check the UPS output current and percentage load on the LCD meter.
13. The UPS is now fully operational and providing uninterruptible* power to your load equipment.

**If the UPS is operating in ECO mode there will be a slight break in the supply if the utility mains fails while the UPS switches to the ON BATTERY mode.*

4.2.2 How to start the UPS (from battery)

If there is no utility mains power available, the UPS can be started directly from battery power. This requires the battery to be fully charged and should only be attempted if the battery has previously been on charge for at least four hours.

Note: Depending on the load demand the UPS will only function on battery for a short time unless the utility mains supply is connected.

1. Connect the load equipment to the UPS AC OUTPUT power outlets – we recommend that the individual load power switches are turned OFF at this stage.
2. Ensure that the UPS output circuit breakers and battery breaker in the external battery cabinet (if used) are closed.
3. Press and hold the ON button for approximately three seconds, until the buzzer beeps twice, then release it.
4. Within a further ten seconds, press and hold the ON button once again (for 3 seconds), until the buzzer sounds another two beeps.

   Note: If you fail to press the ON button for the second time within the allowed ten seconds the UPS will shut down and you will have to start the procedure again.

   a) The UPS control system will boot-up and initially turn on all the LEDs and LCD symbols for approximately one second.
   b) After approximately five seconds the UPS fans will start, and the LEDs and LCD symbols will extinguish.
5. This will be followed by the default UPS ON BATTERY screen.
   a) The LCD mimic diagram should change to indicate the ON BATTERY mode.
   b) The two green programmable power outlet LEDs should turn on.
   c) The utility mains status LED should remain OFF.
   d) The Utility Abnormal icon should be displayed on the LCD screen.
   e) The alarm buzzer will beep once per second to inform you that the battery is discharging.

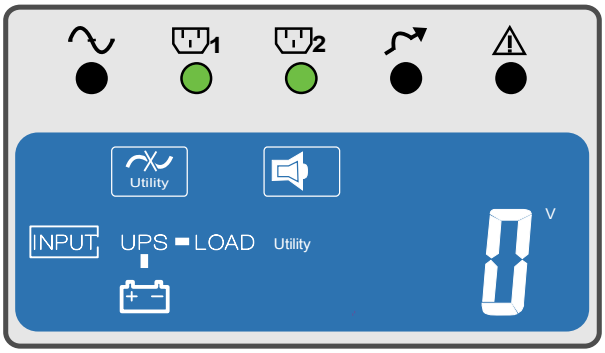

Figure 4.4

6. Check the UPS output voltage and frequency on the LCD meter.
7. Turn ON the individual load power switches.
8. Check the UPS output current and percentage load on the LCD meter.
9. The UPS is now fully operational in its ON BATTERY mode.

CAUTION: *Restore the UPS utility mains supply as soon as possible.*

4.2.3 How the monitor the UPS input/output operating conditions

When the UPS is turned ON, you can use the DOWN and UP buttons to scroll through the measurement display screens. The display sequence is as numbered in the table below and loops around in either direction.

1	Utility Voltage (V)	4	Inverter Frequency (Hz)	7	Battery Voltage (V)
2	Utility Frequency (Hz)	5	Inverter Load %	8	Battery Autonomy (mins)
3	Inverter voltage (V)	6	Inverter Load (A)	9	UPS Temperature (°C)

A rectangular box appears around the INPUT, LOAD and BATTERY icons to indicate which is associated with the meter display, as Illustrated in the examples below.

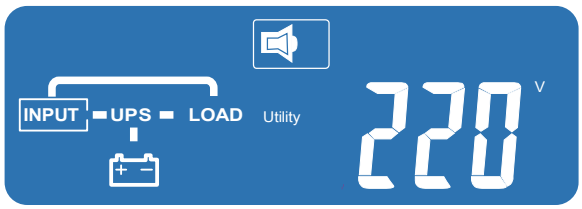

Utility (input) voltage

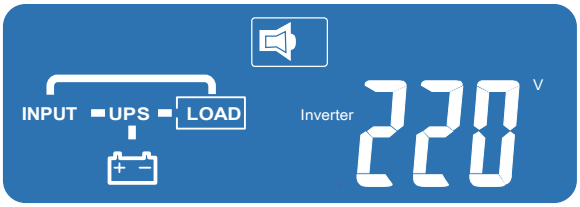

Inverter (output) voltage

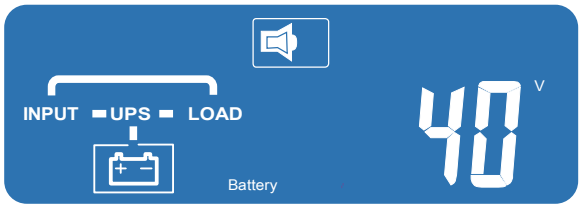

Battery (charge) voltage

Figure 4.5 LCD Meter display (sample screens)

4.3 UPS shut down procedures

4.3.1 How to turn off the UPS (from ON INVERTER or ECO Mode)

Use this procedure to shut down the UPS when it is operating in the ON INVERTER or ECO mode.

1. Press and hold the OFF button for approximately 5 seconds.
   a) The UPS will disconnect the load power and the two programmable power outlet LED indicators should turn OFF.
   b) The utility input mains LED should remain ON.
   c) The LCD mimic should indicate the UPS OFF mode, which shows that the battery is still being charged from the utility mains.
   d) The cooling fans will remain running.
2. Disconnect (or turn OFF) the Utility input supply.
   a) All LED indicators and the LCD panel will turn off.
   b) The cooling fans will stop.
3. The UPS is now totally shut down.

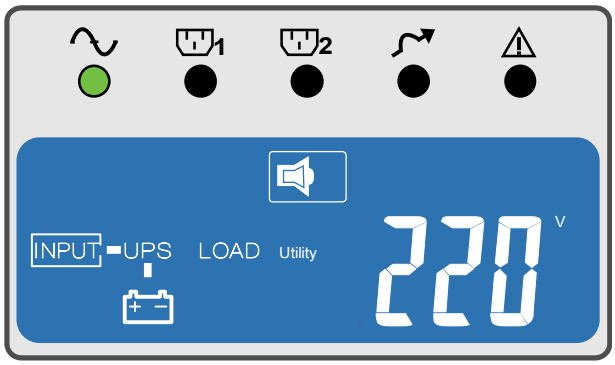

Figure 4.6

4.3.2 How to turn off the UPS (from ON BATTERY Mode)

Use this procedure to shut down the UPS when it is operating in the ON BATTERY mode.

1. Press and hold the OFF button for approximately 5 seconds.
   a) The UPS will disconnect the load power. and the two programmable power outlet LED indicators should turn OFF.
   b) All LED indicators and the LCD panel will turn off.
   c) The cooling fans will remain running for approximately 10 seconds and then shut down.
2. The UPS is now totally shut down.

4.4 Manual load transfer between inverter and bypass

Use this procedure to manually transfer the load between the inverter and bypass.

1. With the UPS operating ON INVERTER, transfer the load to bypass by pressing the ON and UP buttons simultaneously for three seconds.
   a) The load will transfer to bypass.
   b) The BYPASS LED will flash off/on.
   c) The buzzer will beep at approximately 3 second intervals.
2. To transfer the load from bypass to inverter repeat the process by pressing the ON and UP buttons simultaneously for three seconds.
   a) The load will transfer to inverter
   b) The BYPASS LED will turn off
   c) The buzzer alarm will silence.

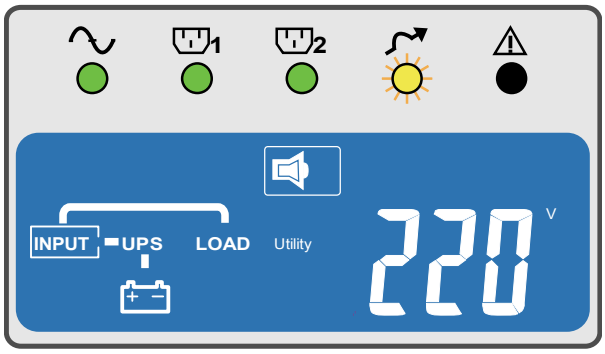

Figure 4.7

4.5 Functions menu

4.5.1 How to disable the alarm buzzer operation

If an alarm condition arises, the buzzer can be silenced by briefly pressing the `ON` button. However there may be circumstances where you would like to disable the buzzer permanently.

1. With the UPS running, press the `FUNCTION` button. This will take you immediately to the Buzzer ON/OFF screen.
2. Press the `UP` button to change the Buzzer operational status between OFF-ON, as required. A cross (X) appears next to the buzzer icon when it is disabled.

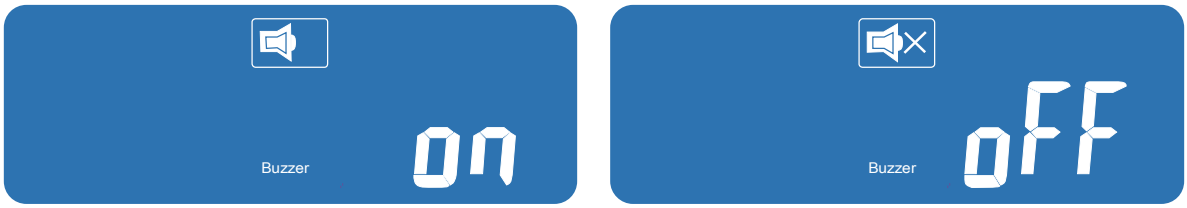

Figure 4.8 Buzzer ON/OFF

3. When the required status is displayed, press the `FUNCTION` button to return to the default LCD screen.

4.5.2 How to perform a battery test

When a battery test is performed, the UPS operates in ON BATTERY mode for 10 seconds to monitor the battery performance. If the battery doesn't satisfy the test criteria a fault is displayed on the LCD panel.

CAUTION: *The battery must be fully charged before you select a battery test. Do not initiate the test until the UPS has been switched on with the battery being charged for at least four hours.*

1. With the UPS turned ON, press the `FUNCTION` button twice. This will take you to the Battery Test screen, which will indicate that the battery test is OFF.
2. Press the `UP` button to start the battery test.

3. During the test, the following indications should appear.
   a) The warning buzzer will beep once per second (if the buzzer is enabled).
   b) The LCD mimic will change to `ON BATTERY` mode.
   c) The `Testing` flag to the left of the battery icon will flash off/on to indicate that the test is in progress.
   d) The LCD returns to the Monitor menu during the battery test.

4. When the test is completed, the UPS will switch back to its normal operating mode and the following indications should appear.
   a) The warning buzzer will stop.
   b) The LCD mimic will change to `ON INVERTER` mode. [or `ECO` mode if selected]
   c) The `Testing` flag to the left of the battery will turn off.
   d) The LCD remains indicating the battery autonomy.

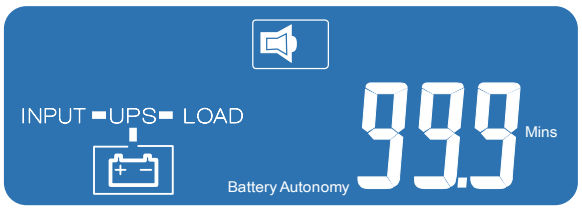

Figure 4.9 Battery Test

5. The UPS is now operating in its normal operating mode and the LCD metering can be selected as normal, using the `UP` and `DOWN` buttons.

4.5.3 Functions menu

The Functions menu, shown in Figure 4.10, can be accessed when the UPS is operating by pressing the FUNCTION button. The menu allows the operator to enable/disable the buzzer, initiate a battery test and observe (but not change) several UPS configuration set-up values.

Once the menu is open you can scroll down through the screens by pressing the DOWN button, as shown.

Buzzer:

Allows the UPS buzzer to be enabled or disabled. This is described in detail in paragraph 4.5.1.

Testing:

Initiates a battery test by switching the UPS to ON BATTERY mode for 10 minutes and monitoring the battery performance. This is described in detail in paragraph 4.5.2.

Bypass Voltage Window:

Displays the bypass voltage window setting. This shows the acceptable bypass voltage range that can be connected to the load when the UPS is operating ON BYPASS and can be either Lo (±15%)or Hi (±10%). This percentage relates to the set inverter operating voltage – for example, if the inverter voltage setting is 230V the bypass sensitivity Lo range is 230V ±15%, i.e., 195.5-264.5V.

Bypass Frequency Window:

Displays the bypass frequency window to which the inverter will synchronise, which is either I [±1Hz] or 3 [±3Hz].

Inverter Voltage:

Displays the selected inverter output voltage setting, which is either [200V], [208V], [220V], [230V] or [240V].

Mode:

Displays the selected UPS operating mode, which be either Std (standard) or Eco.

Inverter Voltage Adjustment:

Displays any applied output voltage offset adjustment, which can be either [-3%], [-2%], [-1%], [0%], [+1%], [+2%] or [+3%].

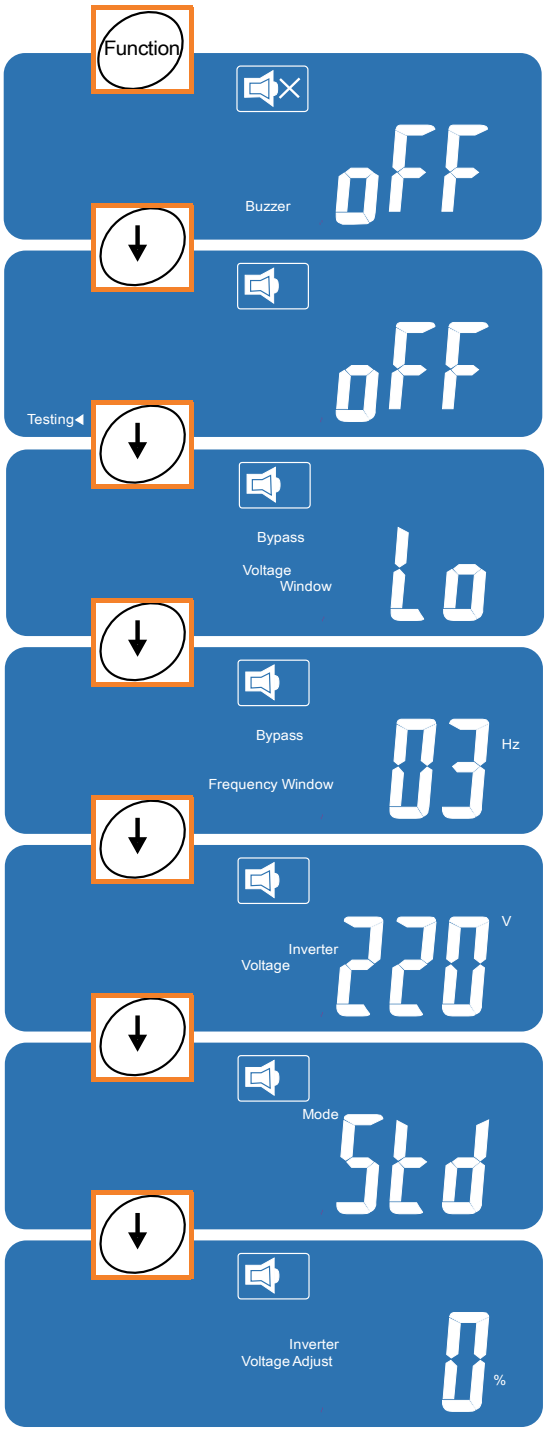

Figure 4.10 Functions menu

4.5.4 Operating parameters setting menu

Figure 4.11 shows the operating parameters than can be accessed and adjusted by the user.

CAUTION: *These parameters should be adjusted by an electrically-trained engineer who is aware of the effects on the system of any changes made.*

1. Ensure that the UPS output is turned OFF.
2. To access the settings menu, press the ON and DOWN buttons simultaneously for three seconds, until the buzzer beeps twice.
3. Press the DOWN button repeatedly to scroll down to the parameter the you wish to change.
4. To change a parameter, press the UP button to scroll through the option range until the required value is shown.
5. To select the chosen value press the DOWN button.
   a) This will temporarily store the value and scroll down to the next parameter menu screen.
6. When you reach the final screen (Inverter Voltage Adjust), press the ENTER button.
   a) Any changes are now saved.
   b) The LCD return to its default screen
7. Turn OFF the UPS utility mains supply and allow 1 minute for the UPS electronics to fully power down.
8. When the utility mains power is next turned on, the UPS will operate with the new parameter settings applied.

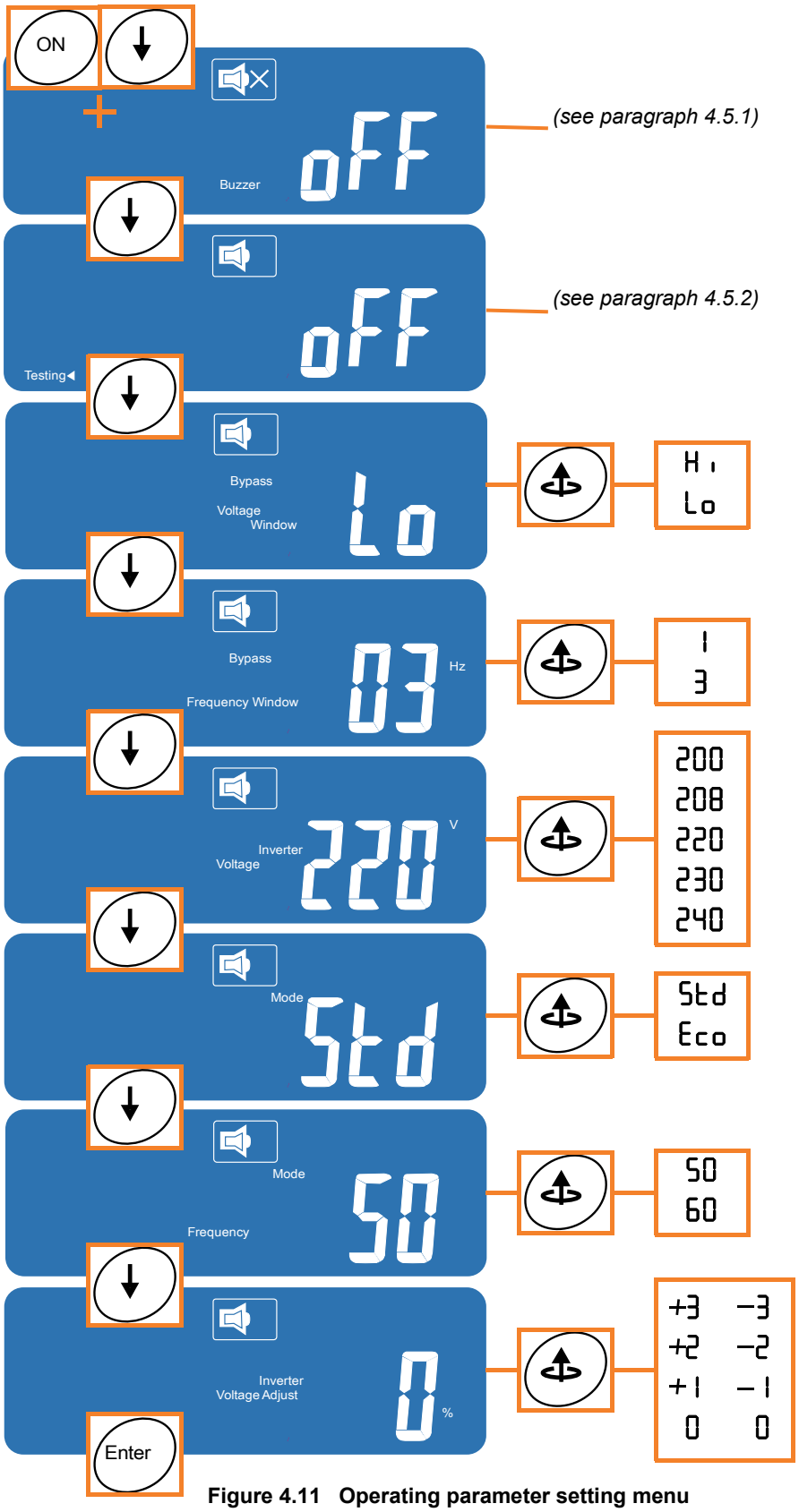

Figure 4.11 Operating parameter setting menu

5 Maintenance

5.1 Introduction

WARNING: Do not remove the covers from the UPS case. If you remove a cover from the UPS case you will be exposed to potentially lethal voltages.

The UPS does not contain any user-serviceable parts, so the day-to-day maintenance requirements are minimal other than to ensure that the environment in which the UPS is installed is kept cool and dust free. A clean, controlled operating environment will help maximise the useful working life and reliability of both the UPS and its batteries.

5.2 Scheduled maintenance

The UPS system and batteries should receive regular preventative maintenance from a trained engineer to maximise both the useful working life and system reliability. If the UPS is commissioned by a Kohler Uninterruptible Power Ltd. service engineer, the engineer will leave a service record book with the UPS which will be used to log its full service history.

We recommend that the UPS system is maintained every six months by a Kohler Uninterruptible Power Ltd. trained engineer or approved service agent, who will complete the following. Preventative maintenance inspections form an integral part of all Extended Warranty Agreements (maintenance contracts) offered by Kohler Uninterruptible Power Ltd.

5.2.1 Preventative maintenance inspection

During a preventative maintenance inspection a trained Kohler Uninterruptible Power Ltd. engineer will check and validate:

- Site environmental conditions
- Integrity of the electrical installation
- Cooling airflow
- Load characteristics
- Integrity of alarm and monitoring systems
- Operation of all installed options
- All stored event logs

5.2.2 Battery maintenance and testing

The batteries should be inspected and tested every six months, depending on the ambient temperature.

The battery test takes approximately two minutes to complete and can be performed only if:

- There are no alarm conditions present.
- The battery is fully charged.
- The UPS input mains supply is present.

The battery test procedure can be carried out from the UPS front panel and performed irrespective of the UPS operating mode (`ON-INVERTER` or `ON-BYPASS/ECO`) and whether or not the load is connected.

Battery disposal and recycling

WARNING: Do not attempt to remove or replace the UPS battery yourself. If a battery is faulty ALWAYS seek assistance form Kohler Uninterruptible Power Ltd. or one of its local service agents.

Batteries contain dangerous substances that can harm the environment if disposed of carelessly. If you have a faulty battery it should be checked and replaced by a trained Kohler Uninterruptible Power engineer who will dispose of any faulty batteries in accordance with any regulations set by local environmental waste disposal organisations.

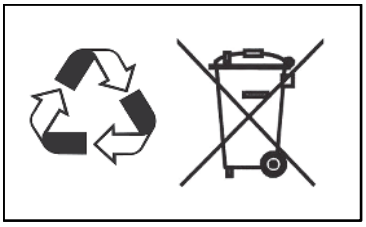

6 Troubleshooting

6.1 Introduction

If the UPS shuts down due to a fault condition, caused by an internal malfunction or severe overload, it might need to be reset to bring it back into operation – see paragraph 6.6. Depending on the nature of the fault, the UPS may either shut down entirely and disconnect the load supply or transfer the load to the internal bypass.

6.2 Fault identification

Unless there is a total UPS failure, the UPS will generally:

- illuminate the red FAULT LED
- display a Buzzer Code (error code) number on the LCD screen – the code indication may be steady or flashing depending on other factors
- sound the audible warning alarm – the audible warning may be cancelled by pressing the ON button briefly
- illuminate the warning symbols at the top of the LCD screen if applicable

6.2.1 Error codes

Buzzer Codes	
05	Weak or faulty battery
06	Output short-circuited
07	EPO Operated
11	UPS Over temperature
12	Inverter overload
14	Fan failure
28	Bypass overload
39	Low input voltage (<160V) or disconnected battery

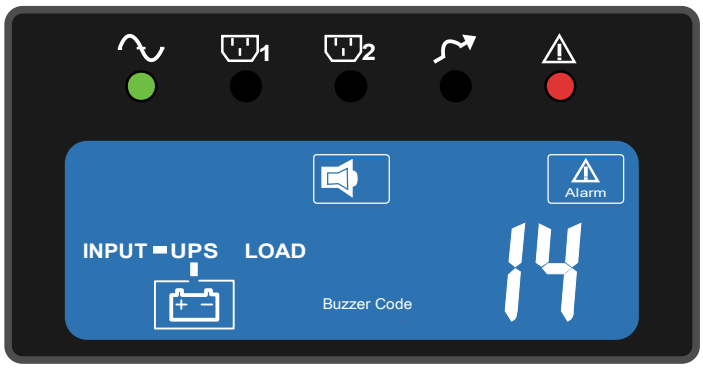

Figure 6.1 LCD Fault Display (Fan failure example)

6.2.2 Audible warning alarm

Audible Alarm (beeps)	
Continuous beep	UPS Faulty, Inverter shut down, keypad error, all functions inhibited
Single beep every two seconds	UPS Faulty, load continued to be supplied via inverter or bypass.
Single beep every second	UPS On-Battery mode, battery discharging
Quick and short successive beeps	Battery low, nearing end of discharge
Two quick and short beeps	Confirm / RS232 port receiving.
One quick and short beep	Service Mode OK

Figure 6.2 Audible warning alarm interpretation

6.2.3 Warning symbols

Bypass	**Bypass input abnormal:** UPS fails to transfer to bypass, bypass abnormal in ECO mode
Utility	**Utility input abnormal:** The utility mains supply is outside the UPS pre-set operating window
Wiring Fault	**Wiring fault:** Site wiring problem such as reversed Line-Neutral connection
	Alarm buzzer silent The alarm buzzer has been silenced or disabled
Overload	**Overload:** The UPS output is overloaded
Service	**Service:** The UPS is operating in its service mode
Alarm	**Alarm:** An alarm condition is present. This remains active after the audible alarm is reset if the alarm still exists.

6.3 Troubleshooting a fault condition

If the UPS develops a fault during operation (red FAULT illuminated), you should check the error codes listed below for appropriate solutions. Should the problem persist, please contact your local service agent for assistance.

Buzzer Code	Possible Solution
05 / 39	**Battery problem:** 1. When applicable, check that the external battery connections have been made correctly. 2. Measure the battery voltage to ensure it is charged and in good condition. Recharge battery for 8 hours if necessary. 3. Simulate a utility supply outage to establish that UPS is able to provide DC back-up. 4. Seek advice from your local service agent if you find no problem with the above.
06	**Emergency Power Off (EPO):** 1. If the external EPO mechanism has been intentionally operated, investigate the reason and rectify any external problems before you restore the UPS operation. 2. If the external EPO mechanism has not been intentionally operated, investigate the external EPO circuit to trace the source of the erroneous EPO command. The external circuit applies a short circuit to the EPO connector on the back of the UPS to effect an EPO shut down. 3. If the external EPO circuit is not faulty, seek advice from your local service agent.
Overload	**Overload:** 1. Disconnect any non critical loads from the UPS output until the overload ceases. 2. Check the condition of the output cables and connectors to determine that they are undamaged and the insulation is sound. Replace the output cables if necessary. 3. Seek advice from your local service agent if you find no problem with the above.
11	**UPS Over temperature:** 1. Remove any objects obstructing the ventilation louvres. 2. Check to ensure that the cooling fans are working properly (see also buzzer code 14), and contact your local service support centre to replace the fans if necessary. 3. Seek advice from your local service agent if you find no problem with the above.

Buzzer Code	Possible Solution
Wiring Fault	**Site wiring/earth fault:** 1. Check that the utility AC source 'L' & 'N' have been wired correctly. 2. Check that the earth/ neutral voltage does not exceed the limits specified in Chapter 8. 3. Seek advice from your local service agent if you find no problem with the above.
14	**Fan error:** 1. Verify that the ventilating fans are functioning properly. 2. Contact your local service agent for fan replacement. Do not attempt to replace them yourself.
Other	For all other error codes, seek advice from your local service agent.

6.4 Troubleshooting an operational problem

Symptom	Possible Solution
UPS fails to provide battery back-up, or the back-up time is shorter than its specified performance.	1. Charge the battery for eight hours. 2. If the back-up time remains unsatisfactory after 8 hours of charging, please contact your local service agent for battery replacement.
UPS operation appears to be normal but there is no output to load.	1. Check that all output power cords are connected correctly. 2. If the problem is with one of the programmable outlets, seek service support who will check the programmable outlets settings and recalibrate them if necessary. 3. If the problem persists, seek advice from your local service agent.
The UPS switches to battery mode then back to on-line mode, when the connected device is turned on. Or, the UPS switches back and forth between battery and on-line mode.	1. Check for a faulty UPS input cable or utility supply wall receptacle and replace/repair any faulty item found. 2. If the problem persists, seek advice from your local service agent.
Strange noise and/or odour emitted by UPS	1. Shut down the UPS system immediately. 2. Turn off the utility mains supply. 3. Seek advice from your local service agent.

6.5 UPS Fault handling

ON INVERTER overload

The UPS is equipped with an electronic overload protection feature which switches the load to the bypass line after 30 seconds if the UPS load rises to between 105% ~ 120% of its rated capacity. This is reduced to 10 seconds for loads between 121% ~ 150%, with an instant transfer taking place for loads greater than 150%.

If the load transfer is due to starting a load with a high inrush current, the overload will be short-lived, and once the current being drawn from the bypass falls below <105% of rated load, the UPS will switch back to inverter mode automatically.

If the UPS appears to be repeatedly momentarily overloading, it could be due to the inrush currents being produced as various multiple loads are started.

ON BATTERY overload

When operating `ON BATTERY`, the UPS overload characteristics are identical to when operating `ON INVERTER`. The difference is that, due to the lack of bypass supply, the UPS is unable to transfer the load to bypass if the load capacity/ time characteristic is exceeded, so the UPS will shut down.

ON BYPASS overload

The UPS bypass line is also equipped with overload protection. Its overload capacity/time characteristics are illustrated in the table below.

Load (%)	106-120	121-130	131-135	136-145	146-148	149-157	158-176	177-187	>188
Delay Time (sec)	250	125	50	20	5	2	1	0.32	0.16

6.5.1 Output load short circuit when the output supply is via inverter

If output load is short circuited while it is being supplied via the inverter:

1. The inverter will immediately shut down and disconnect the supply to the load.
2. The FAULT led will illuminate and the audible alarm will beep continuously.
3. The UPS will not switch on automatically after the short-circuit condition is eliminated. It has to be re-started manually.

6.5.2 Output short-circuit when the output supply via the bypass line

If the output load is short-circuited while the UPS is operating in ON BYPASS mode:

1. The utility supply fuse/breaker will open to prevent the output load from damage.
2. You must replace the fuse with a fuse of the same rating after the cause of the short-circuit condition has been rectified.

6.5.3 Inverter/internal over-temperature

If the UPS experiences an internal over-temperature when the utility supply is normal it will switch to ON BYPASS mode and switch back to ON INVERTER mode when the over-temperature situation has been eliminated.

If over temperature occurs when the utility supply is abnormal:

1. The audible alarm will beep continuously.
2. The FAULT led will illuminate.
3. The inverter will shut down and disconnect the load supply.

6.5.4 Inverter over-current and output voltage out of tolerance

If the UPS develops a fault and its inverter delivers an over-current and out-of-tolerance voltage:

1. The UPS will switch to ON BYPASS mode as long as the utility supply is normal.
2. The UTILITY led, BYPASS led and FAULT led will illuminate.

If these fault conditions occur when the utility supply is abnormal:

1. The inverter will shut down and disconnect the load supply.
2. The FAULT led will illuminate.

6.6 UPS System reset

The UPS control system may ‘lock-up’ following a critical abnormal failure condition. If the UPS appears unresponsive to control operations you can reset it using the following procedure:

1. Note and record the error code shown on the LCD screen, and check the information in this chapter to help analyse the cause of the UPS problem. This will be useful if you need to contact the service support centre later.
2. Press an hold the OFF button for at least five seconds.
3. Turn off the utility mains power supply and allow one minute for the UPS control power supply to completely shut down.
4. The UPS control system is now reset and, if the cause of previous fault condition is no longer apparent, you should be able to turn on the UPS as normal.
5. If you are unable to restart the UPS then please seek service support.

7 Options

7.1 Communications options

The UPS has several provisions for communicating with external devices and systems, including:

- External Emergency Power Off (EPO) or Remote On/Off (ROO).
- RS-232 and USB ports to provide communication with monitoring software installed on a remote PC.
- Optional card slot that can be used with an intelligent CS141 card for local or area network UPS monitoring and control, or a Dry Contact relay card to provide volt-free signalling that can be integrated into an external alarm monitoring or building management system.

All communication ports, including the optional cards, can be active and used simultaneously to monitor the UPS status; however, only one communication interface at a time can control the UPS. This is determined on a priority basis, with the higher priority interface gaining control.

The interface control priorities are as follows:

- EPO input port
- Optional interface card
- Optional USB
- Optional RS-232

7.2 RS-232 Computer serial interface

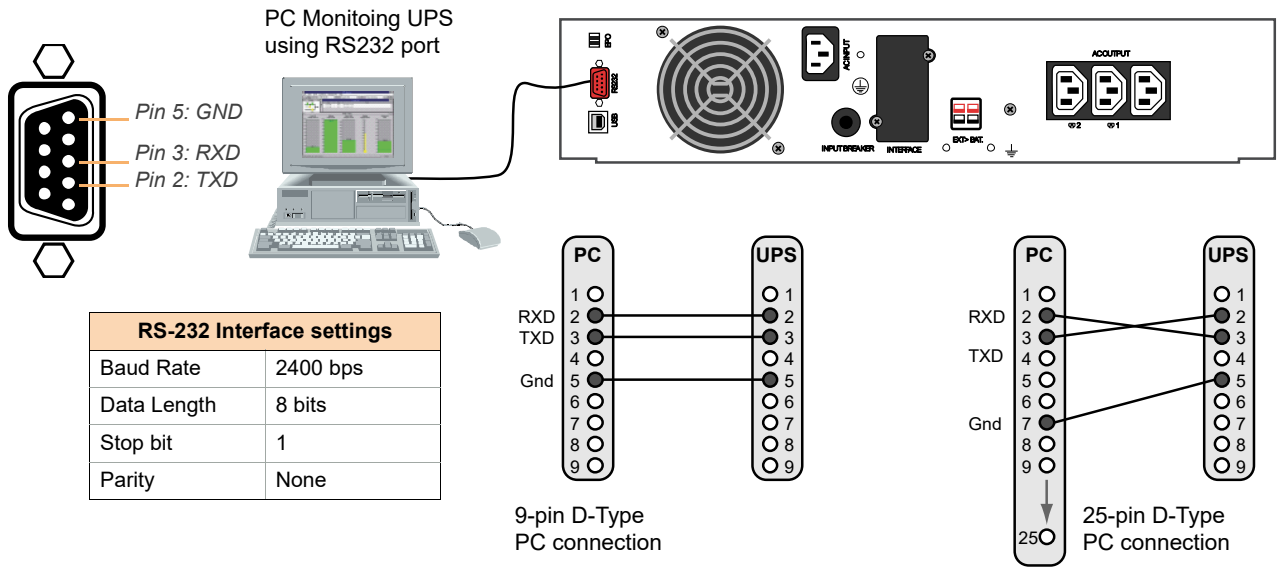

RS-232 Interface settings	
Baud Rate	2400 bps
Data Length	8 bits
Stop bit	1
Parity	None

Figure 7.1 RS-232 Serial communications port

Note: The USB port is connected in parallel with RS-232 port and outputs the same data stream.

When used in conjunction with suitable software, the RS-232 and USB ports allow the connected PC to continuously monitor the input mains voltage and UPS status, and display appropriate operating data and messages.

The RS-232 connector is a 9-pin female D-type and can be connected to a PC using standard serial cable wired as shown in Figure 7.1. The maximum permitted RS-232 cable length is 15 metres.

7.3 Emergency Power Off (EPO) / Remote ON/OFF (ROO)

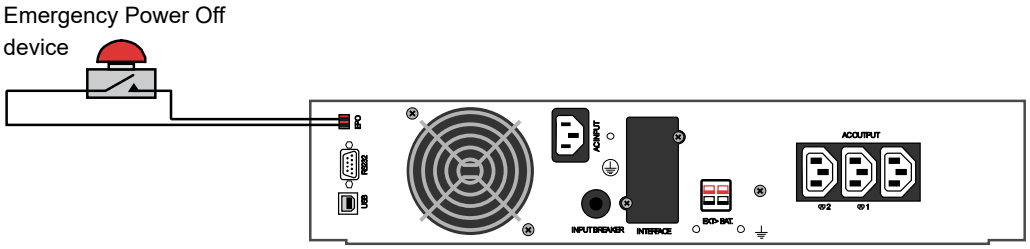

Figure 7.2 EPO Connection

The Emergency Power Off (EPO) option allows you to turn off the UPS using an external switch or contact that is wired to the EPO terminal block on the back of the UPS. The external circuit consists of a 'normally open' external contact that will power-off the UPS when the contact is closed.

When the EPO circuit is activated the UPS output is shut down, removing power to the load, but the battery charger remains operational to maintain battery charging. An EPO alarm is shown on the LCD display but you can still scroll through and monitor the UPS input, battery and output metering.

Once the external EPO command is removed, the UPS must be restarted by pressing the UPS ON button to restore the UPS to normal operation.

The external EPO connection should be made using a screened, single pair cable (0.5mm²) with a maximum length of 100 metres.

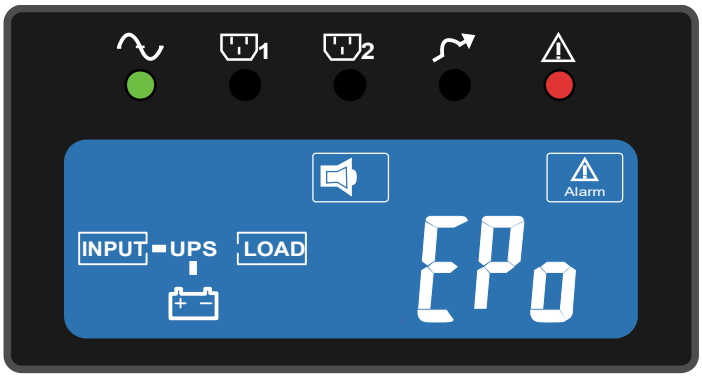

Figure 7.3 EPO Warning

7.4 CS141 /SMNP adapters

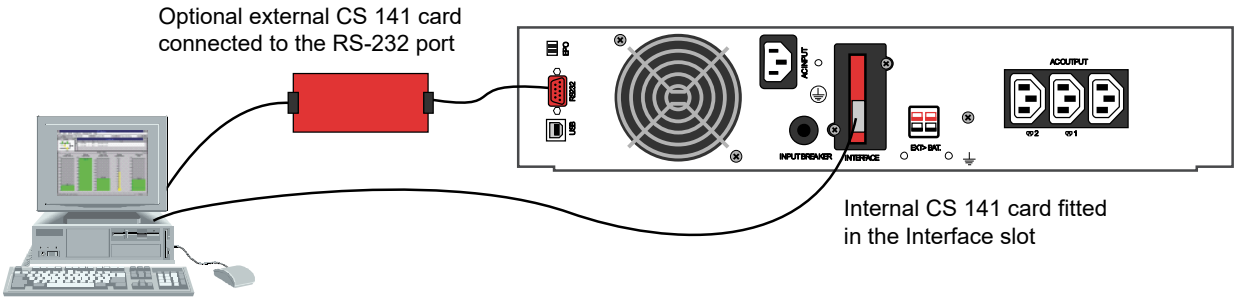

Figure 7.4 SNMP Adapters

Simple Network Management Protocol (SNMP) is a world-wide, standardised communication protocol that can be used to monitor any network-connected device via a simple control language and display the results in a browser-based application. The software agent built in to the CS141 adapter card makes the UPS data available in this SNMP format which can then be utilized by a number of UPS management software applications.

The card contains a serial interface, which can be connected directly to a computer's serial port, and an RJ-45 connector which allows it to be connected to a network using a standard CAT-5 cable. The SNMP adapter can be configured via Telnet, http (browser) or serial connection. For normal operation, at least one Ethernet network connection is necessary.

Once installed, the UPS-Management software agent, which is already installed in the card, monitors the UPS operation and outputs its data in SNMP format to the connected network. The card enables automated generation of event/alarm emails, server controlled shut down (with optional licenses) and other tasks, and can also be integrated with BMS software over a local area network (LAN) for SNMP or Modbus information over IP.

Kohler Uninterruptible Power Ltd. offer monitoring software with SNMP functionality for Novell, OS/2, and Windows that run both on INTEL and on ALPHA, DEC VMS and Apple.

An optional external SNMP adapter can be connected to the UPS via its RS232 port if the UPS card slot is in use (e.g. DCE card fitted) but SNMP facilities are still required.

RCCMD

RCCMD (Remote Console Command Module) for ‘multi-server shut down’ is an independent software module intended for transmitting and receiving ‘remote commands’. Using the ‘RCCMD send’ function, the SNMP adapter can send status messages to connected users or initiate automatic shut down throughout the whole network. Our CS141 SNMP adapters are fully compatible with RCCMD.

7.5 AS400 (dry contact) card

The DCE dry contact card provides volt-free signalling outputs that can be integrated into an external alarm monitoring panel or building management system.

All the output connections at pins 1-7 are switched by relays whose pole contacts are connected to terminal 8 (common). Figure 7.5 shows an example of the `INVERTER ON` relay. Note that all the outputs to terminals 1-7 are link-selectable to be either short-circuited or open-circuited to the common Pin 8 when the monitored parameter is ‘active’. Details for configuring the links are provided in the documentation that accompanies the card.

Terminals 9 an 10 are inputs that can be used to shut down the UPS when en external voltage of 6-25VDC is applied, as shown.

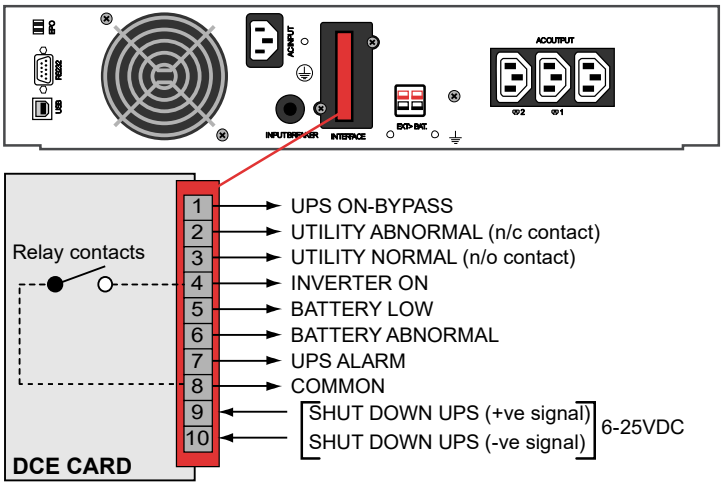

Figure 7.5 Dry Contact card (DCE)

8 Specification

Model Rating		1 kVA	2 kVA	3 kVA
Apparent output power	VA	1000	2000	3000
Real output power (@180-300VAC, PF=0.9)	W	900	1800	2700
Autonomy time (standard battery 100% load)	min.	>4	>4	>3
Topology		Double conversion on-line VFI-SS-111		
Form factor		19"-Rack / Tower		
Input:				
Nominal voltage	VAC	Single phase, 110 - 300 VAC (@60% load) Single phase, 150 - 300 VAC (@75% load) Single phase, 180 - 300 VAC (@100% load)		
Frequency	Hz	50 or 60 Hz, ± 5 Hz		
Power factor		≥0.99 at full rated linear load		
Input power connection		10A IEC 320-C14	10A IEC 320-C14	16A IEC 320-C20
Output:				
Voltage	VAC	Single phase, 230 VAC, selectable at 200/208/220/230/240 VAC 2 switched programmable outputs (setting via software)		
Switching time Inverter-Bypass (typical)	ms	4ms (typical)	4ms (typical) / 0ms (optional)	
Voltage regulation	%	±1 (until low battery warning)		
Frequency	Hz	50/60 Hz, ±0.2% Unless synchronised to line		
Synchronisation window	Hz	±3 Hz or ±1 Hz (selectable)		
Voltage distortion (THD)	%	≤ 3% (linear load), ≤ 7% (non linear load)		
Overload capability (AC Mode) (Tolerance ±1%)	%	<105% Load = continuous operation, from 106%...120% Load = transfer to bypass after 30 Sec. from 121%...150% Load = transfer to bypass after 10 Sec >150% Load = transfer to bypass immediately Buzzer continuously alarms		
Overload capability (BATTERY Mode) (Tolerance ±1%)	%	Up to 105% Load = continuous operation, from 106%...120% Load = shut down after 30 Sec. from 121%...150% Load = shut down after 10 Sec >150% Load = shut down immediately Buzzer continuously alarms		
Overload capability (BYPASS Mode) (Tolerance ±1%)	%	Up to 105% Load = continuous operation, from 106%...120% Load = shut down after 250 Sec. from 121%...130% Load = shut down after 125 Sec. from 131%...135% Load = shut down after 50 Sec. from 136%...145% Load = shut down after 20 Sec. from 146%...148% Load = shut down after 5 Sec. from 149%...157% Load = shut down after 2 Sec. from 158%...176% Load = shut down after 1 Sec. from 177%...187% Load = shut down after 0.32 Sec. >188% Load = shut down after 0.16 Sec. Buzzer continuously alarms		
Short circuit handling		In normal mode: output breaker / electronic circuit In battery mode: output breaker / electronic circuit In bypass mode: input fuse		

Model Rating		1 kVA	2 kVA	3 kVA
Over-temperature (AC Mode)		Switch to bypass		
Over-temperature (On Battery Mode)		Immediate UPS shutdown		
Crest factor		3:1		
Heat dissipation (approx)	W	150	275	415
Output power connection		(3) 10A IEC 320-C13	(6) 10A IEC 320-C13	(6) 10A IEC 320-C13 (1) 16A IEC 320-C19
Efficiency:				
Mains operation (Full linear load @230V)	%	90	91	91
Battery mode (Full linear load)	%	86	87	87
ECO (bypass) mode (Full linear load @230V)	%	97	97	97
Environment:				
Temperature (°C)	°C	Operating: 0°C~40°C / Storage: -10°C~50°C (The battery must be maintained at 20°C to ensure its lifespan is not reduced)		
Altitude	m	0-2000m up to 40°C / 3000m up to 35°C		
Humidity	%	0%...90%, non-condensing		
Sound level	dBA	≤50 dBA		
Batteries:				
Quantity (internal)		3	6	6
Type VRLA		12V / 7.2Ah	12V / 7.2Ah	12V / 9.0Ah
Rated battery voltage	VDC	36	72	72
Battery back-up time (@50%, 70%, 100% load)	Mins	>11, >8, >4	>11, >8, >4	>9, >6, >3
Charge current (Standard / Extended charger)	A	2.1A, 3.1A	1.5A, 3.1A	1.5A, 3.1A
Recharge time to 90%	Hrs	4 Hrs	4 Hrs	4 Hrs
Float charging voltage	VDC	40.95 ±1%	81.9 ±1%	81.9 ±1%
Bulk charging voltage	VDC	42.3 ±1%	84.6 ±1%	84.6 ±1%
Discharging current (with UPS and Mains OFF)	uA	< 30uA		
Life cycle (typical)		Up to 5 years, if maintained at 20°C ambient temperature		

Model Rating		1 kVA	2 kVA	3 kVA
Communications:				
Standard interfaces		EPO, RS-232		
Optional interfaces		2nd RS-232, USB, CS141 SNMP card, Dry contact relay card		
Compatible platforms		Windows, Linux, Mac etc		
Mechanical Data:				
Dimensions (WxWxD)	mm in	440 x 88(2U) x 405 17.3 x 3.5(2U) x 15.9	440 x 88(2U) x 600 17.3 x 3.5(2U) x 23.6	440 x 88(2U) x 600 17.3 x 3.5(2U) x 23.6
Weight	kg / lbs	11.7 kg / 25.8 lb	21.8 kg / 48 lb	24.6 kg / 54.2 lb
Input power connection		10A IEC 320-C14	10A IEC 320-C14	16A IEC 320-C20
Output power connection		(3) 10A IEC 320-C13	(6) 10A IEC 320-C13	(6) 10A IEC 320-C13 (1) 16A IEC 320-C19
Other connectors		1 x USB, 1 x RS232, 1 x 2-pole EPO Connector 1 x Interface Slot		
Options:				
Accessories		External bypass External battery module(s) Output distribution 19"- rack rails (up to 1 Meter)		
Compatibility:				
Operating systems		Windows, Unix (and derivatives), OS/2, Novell, AppleOS		
Audible Alarms:				
Battery mode		Will sound every 1.5 Seconds		
Battery low		Resounds every 2.0 Seconds		
Overload		Resounds every 3.0 Seconds		
General error		Will sound permanently (or every 3 Seconds)		
Standards:				
Safety		IEC/EN 62040-1-1		
EMC-Compatibility		EN 62040-2, EN 61000-3-2, EN61000-3-3,		
Performance features		IEC/EN 62040-3		
Product certification		CE		
Protection Class		IP 20		
Manufacturing standards		ISO 9001.2000		

External battery cabinet

Model Rating		230V / 1kVA	230V / 3kVA
Battery voltage	VDC	36	72
Battery number & capacity	Ah	6x 12V/ 7Ah-9Ah	12x 12V/ 7Ah-9Ah
Battery strings		2x Strings of 3 batteries	2x Strings of 6 batteries.
Dimensions (WxHxD) in/mm	in mm	440 x 88(2U) x 405 17.3 x 3.5(2U) x 15.9	440 x 88(2U) x 600 17.3 x 3.5(2U) x 23.6
Weight (Empty)	kg / lb	4.7 kg / 10.4 lb	4.9 kg / 10.8 lb
Weight (with 9Ah Batteries)	kg / lb	28.15 kg / 62 lb	37.8 kg / 83.33 lb
Output current (max)	A	50	50
Operating environment		0~40°C / 32~104°F (Battery must be maintained at 20°C to ensure its lifespan is not reduced) 30-90% RH non-condensing	
Storage environment		-15~45°C / 5~113°F 30-90% RH non-condensing	
Compliance		CE / cTUVus	